US Valve

ISO 9001 : 2015

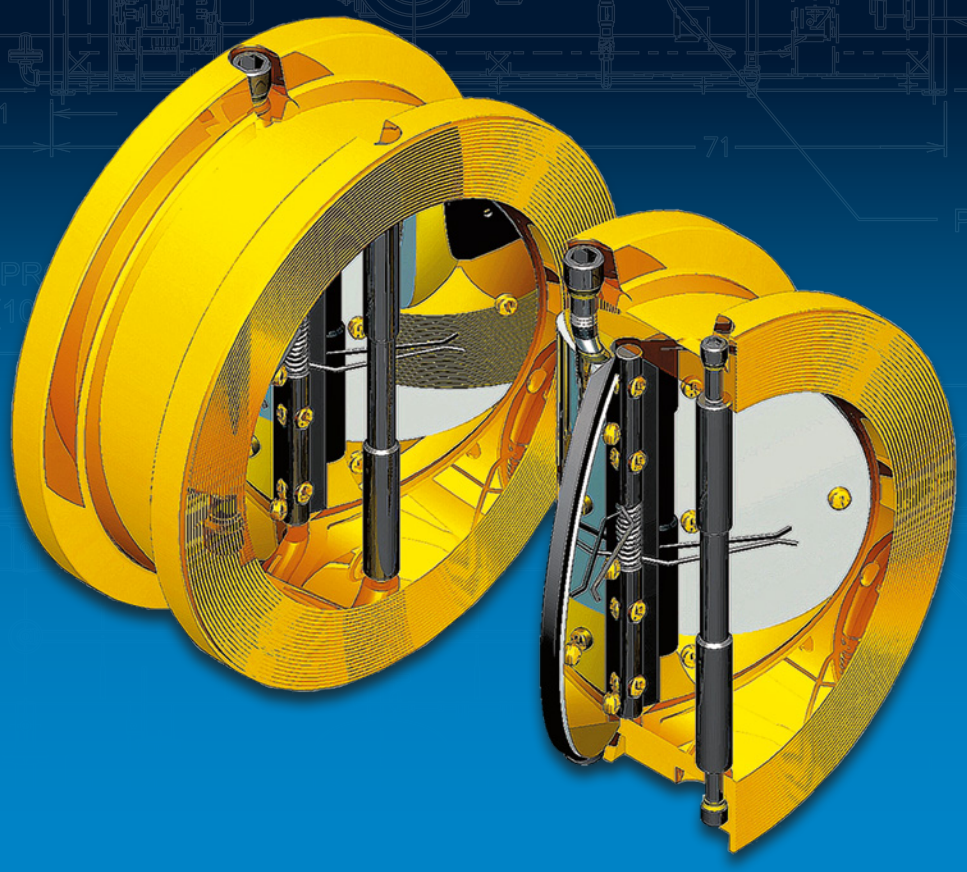

Wafer Check Valves

Full Port — Lowest Pressure Drop

Maximizing the Flow

Full Port, Lowest Pressure Drop

Full Port Wafer Check Valves provide more flow and lower pressure drops than conventional check valves. Our elastomer hinge wafer check valve design takes performance to an entirely new level by eliminating the restrictive valve seat and substantially increasing the valve's open area and flow coefficient (Cv). The resulting flow is more laminar, with lower pressure loss and reduced turbulence. It also improves valve life and reliability. Keeping pressure loss low is always important, but particularly so when handling low pressure air and gases.

Dual disc wafer check valves are the clear choice for many piping engineers because of their proven reliability, ease of installation and low ΔP. Now, they are available in a full port design that dramatically improves performance. They are ideal for application in vacuum pumps, compressed air and gas systems as well as in water systems where low head loss and elimination of water hammer are desirable.

US Valve Wafer Check Valves are available in a wide variety of materials and configurations to fit your application requirements.

Valve Testing

Every elastomer hinge check valve we manufacture is assembled, inspected and tested in our plant in Maryland -USA. Our commitment to quality assures you the performance and reliability you demand and expect. Material test reports and test certificates are available on request.

U.S. Valve LLC — The Right Choice

US Valve is a New Jersey Corporation with headquarters in New Jersey and manufacturing locations in Maryland–USA, Europe and Asia. Our primary focus is check valves and our roots are grounded in low pressure drop designs. Our application engineers can assist you in making the right choice of valve for your application.

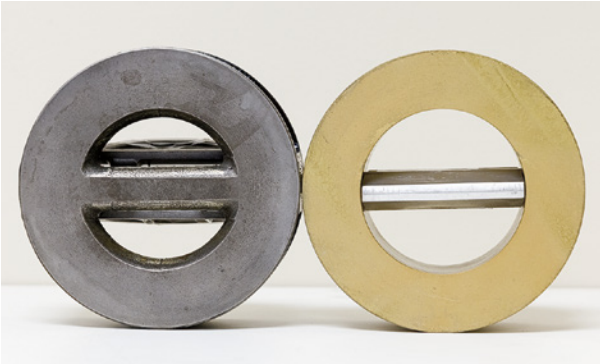

Our elastomer hinge design (on right) eliminates the check valve seat, provides greater open area and lower pressure drop compared to traditional metal hinge dual plate wafer check valves.

Low Price, Delivery & Service

We want to be your supplier of Wafer Check Valves, so we offer *Competitive Pricing, Fast Delivery* and *Outstanding Service.* We maintain an extensive inventory of valves, parts and components in a wide variety of materials so we can respond to your needs quickly. Valves are typically assembled and tested within 1 to 2 days after receipt of an order.

We can say with confidence that our customer service is the best in our industry. Give us a chance to prove it.

ISO9001:2015 Certified

US Valve is **ISO 9001:2015 Certified.** We always keep our certification current. We take our commitment to product quality and documentation seriously. You can rest comfortably knowing that we provide only the best to our customers.

Features & Benefits

Full Port Wafer Check Valves offer some impressive advantages over other types of check valves.

• Low Pressure Drop (High Cv)

Our elastomer hinge check valves have larger open area than other designs, thus providing higher capacity and lower pressure drops than swing and lift check, or even traditional dual plate wafer designs.

• Light Weight

Reduces weight by 80–90% compared to conventional Flanged check valves.

• ARRA Compliant

USA content, substantial transformation and local assembly makes our Full Port Wafer Check Valves ARRA compliant for government funded projects.

• Alleviates Water Hammer

When spring activated, our discs are designed to close 33% faster than standard dual plate wafer check valves due to the fact that they are closed at a 30 degree angle. This makes for an effective non-slam design when installed in liquid applications.

• Simple Installation

Easier to install, remove and replace in both new and existing piping systems.

• Variety of Configurations

We stock a wide variety of wafer bodies in different styles and materials. These can be assembled with any one of our standard disc, optional spring and elastomer seal choices to make a valve that exactly fits your application. Pins and hardware are always 316SS.

Our patented, aerodynamic wing support and reinforced elastomer hinged double discs provide the lowest resistance to flow. Front and rear disc plates provide strength and stability and ensure positive seating. Optional springs are available in a variety of tensions.

Industries Served

- Industrial and Wastewater
- Vacuum Pumps
- Low Pressure Fans and Blowers
- Pneumatic Conveying Systems
- Well Applications
- Power Plants
- Emergency Vehicle Pumpers
- Compressed Air Dryers
- RO Water Systems
- Pulp & Paper
- Marine

Valve Dimensions

H-Body Wafer

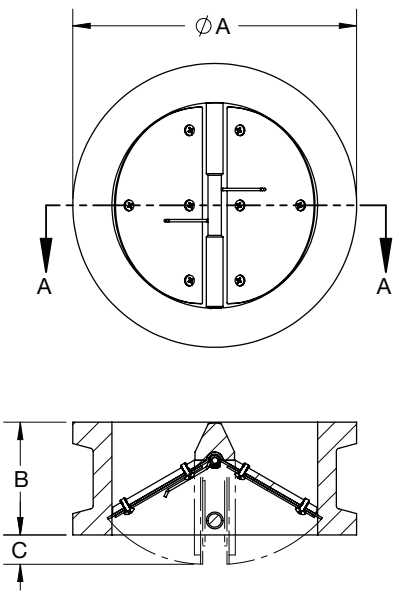

Solid Body Wafer

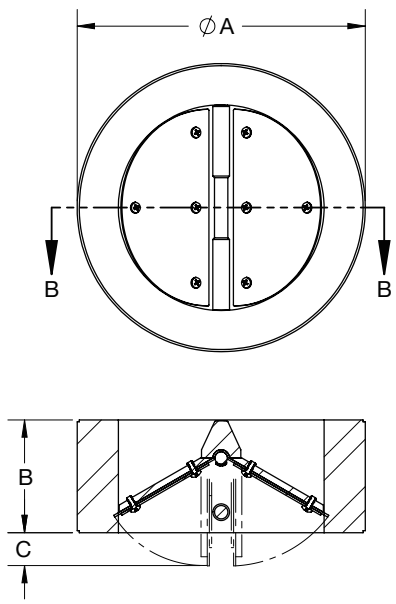

Extended Body Wafer

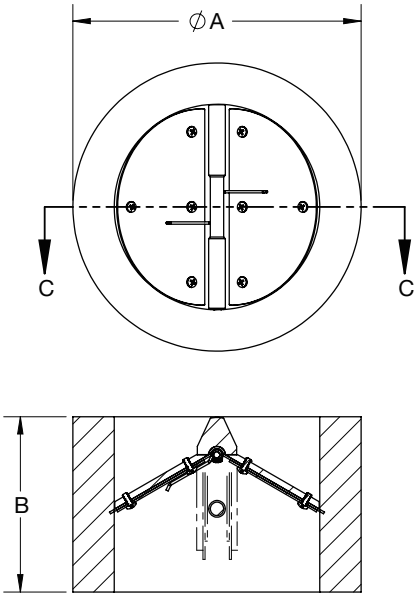

Solid Body & H-Body Dimensions

Size	A	B	C
1 ½	3 ¼	1 ⅜	¼
2	4 ⅛	1 ½	½
2 ½	4 13/16	1 11/16	⅝
3	5 ⅜	2 ¼	11/16
4	6 ⅞	2 7/16	⅞
5	7 ⅝	2 15/16	1 ⅛
6	8 ⅝	3 ⅜	1 ½
8	11	4 ⅜	2 ¼
10	13 ⅜	5 ⅜	2 ½
12	16	6 ⅜	3
14	17 ⅝	7 ⅜	3 ¼
16	20 ⅛	8 ⅜	3 ¾
18	21 ½	9 ⅜	4 ¼
20	23 ¾	10 ⅜	4 ¾
24	28 ⅛	12 ⅜	5 ¾
30	34 ⅝	15 ⅜	7

All dimensions in inches

Extended Body Dimensions

Size	A	B
1 ¼	2 ⅞	1 ⅝
1 ½	3 ¼	1 ¾
2	4	2
2 ½	4 ¾	2 ½
3	5 ¼	3
4	6 ¾	3 ¾
5	7 ⅝	4 ¼
6	8 ⅝	5 ¼
8	11	6

H-Body Wafer

Solid Body Wafer

Exploded View

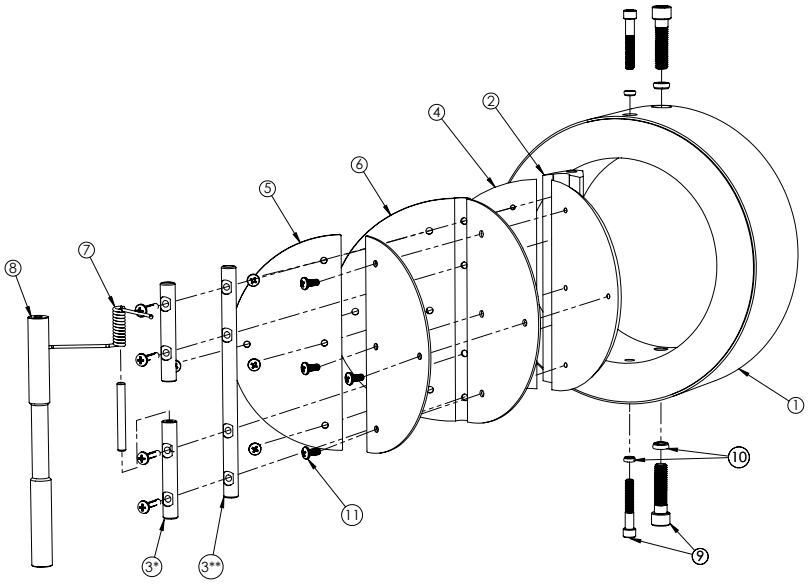

Part No.	Part Description
1	Wafer Body (Solid Body Style Shown)
2	Wing Support
3*	Spring Pin
3**	Wing Pin
4	Disc
5	Back-up Disc
6	Elastomer Seal
7	Spring
8	Limiter
9	WS/LM Fastener
10	Sealing Washer
11	Internal Fasteners

Note: If valve is supplied with optional spring, use part number 3 (Spring Pin), otherwise use 3** (Wing Pin).*

US Valve Flow Coefficients (Cv) vs. Conventional Designs

Size	US Valve Full Port Dual Disc	Conventional Duo Disc Design	Conventional Swing Check Design	Conventional Lift Check Valve
1	**37**	—	22	17
1 ¼	**65**	—	39	—
1 ½	**83**	—	55	35
2	**145**	75	65	63
2 ½	**350**	95	90	100
3	**590**	190	135	148
4	**920**	375	215	260
5	**1400**	480	680	415
6	**2800**	820	1270	620
8	**4900**	1590	2350	1030
10	**7200**	2900	3850	1630
12	**9000**	4500	4750	2370
14	**11000**	5900	7400	3500
16	**13000**	8700	9550	5100
18	**15000**	10900	13000	6400
20	**28000**	14300	22000	7700
24	**39000**	23000	—	11100
30	**58000**	37000	—	—

Check Valve Flow Coefficient Comparisons (Cv) — GPM of water @ 60°F and 1 PSI Pressure Drop

Valve Numbering, Nomenclature and Standard Materials

Don't see what you're looking for?

We stock and source thousands of valves and components in various sizes and materials not shown here.

Please contact us to discuss options:
+1.410.789.0999 · usv-info@idexcorp.com

Part Numbering

Sizes [2]	– Style –	Material Codes	Elastomer Seal Codes	Spring Codes	Options
4" – 12"	– 09 –	00	V	Blank or SP	(1)
2.5" – 6"	– 09 –	14	E[3], B[4], S or V	Blank or SP	
3" – 24"	– 09 –	20	B[4], S[5] or V	Blank, SP or SL[7]	
1.5" – 12"	– 09 –	44	E[3], B[4], T[6] or V	Blank, SP or SL[7]	

(1) Consult factory for additional options, special paint, drain holes, special springs & more
(2) Other sizes, consult factory
(3) EPDM seal, 3"– 24" only, other sizes consult factory
(4) Buna-N seal, 4"– 8" only, other sizes consult factory
(5) Silicone seal, 2.5"– 16" only, other sizes consult factory
(6) Teflon seal, 2"– 4" only, other sizes consult factory
(7) Light Spring, 6"– 14" only, other sizes consult factory

Example:

Size		Style		Material Code	Elastomer Seal	Spring		Options [1]
6	–	09	–	20	V	SP	–	

The above valve would be 6" diameter, Wafer Style (09), Cast Iron Body (2), Aluminum Internals (0), Viton Elastomer Seal (V), and a 316 SS Standard Torque Spring (SP). It would be designated **6-09-20VSP**.

Material Codes

Material Code	Body	Disc	Wing Support	MAWP*
00	Aluminum 6061T6	Aluminum ASTM B209 6061T6	Aluminum 6061T6	200 PSI
14	Carbon Steel ASTM A105 Gr. 2	316 Stainless Steel ASTM A240	316 Stainless Steel ASTM A276	300 PSI
20	Cast Iron ASTM 126 Gr. B (H Body Style)	Aluminum ASTM B209 6061T6	Aluminum 6061T6	250 PSI**
44	Stainless Steel ASTM A182 316	316 Stainless Steel ASTM A240	316 Stainless Steel ASTM A276	300 PSI

* MAWP – Maximum Allowable Working Pressure @ 60°F
** Sizes 18" to 30" have a MAWP of 150 PSI

Elastomer Seal Code	Material	Temp. Range
B	Buna N	-60°F to 225°F
E	EPDM	-40°F to 250°F
V	Viton	-20°F to 400°F
S	Silicone	-100°F to 500°F
T	Teflon	-20°F to 450°F

Spring Code	Nomenclature
Blank	No Spring
SP	SS316 Spring
SL	SS316 Light Spring

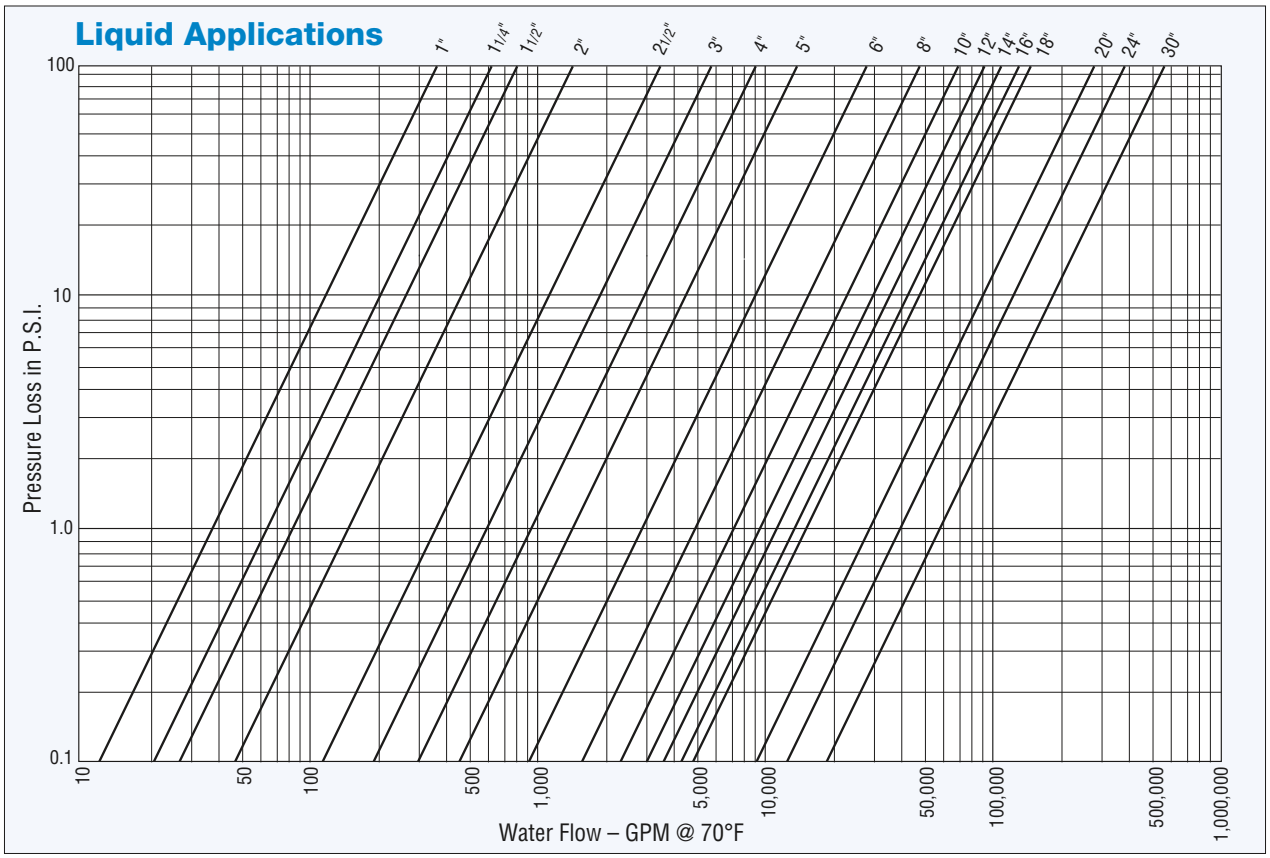

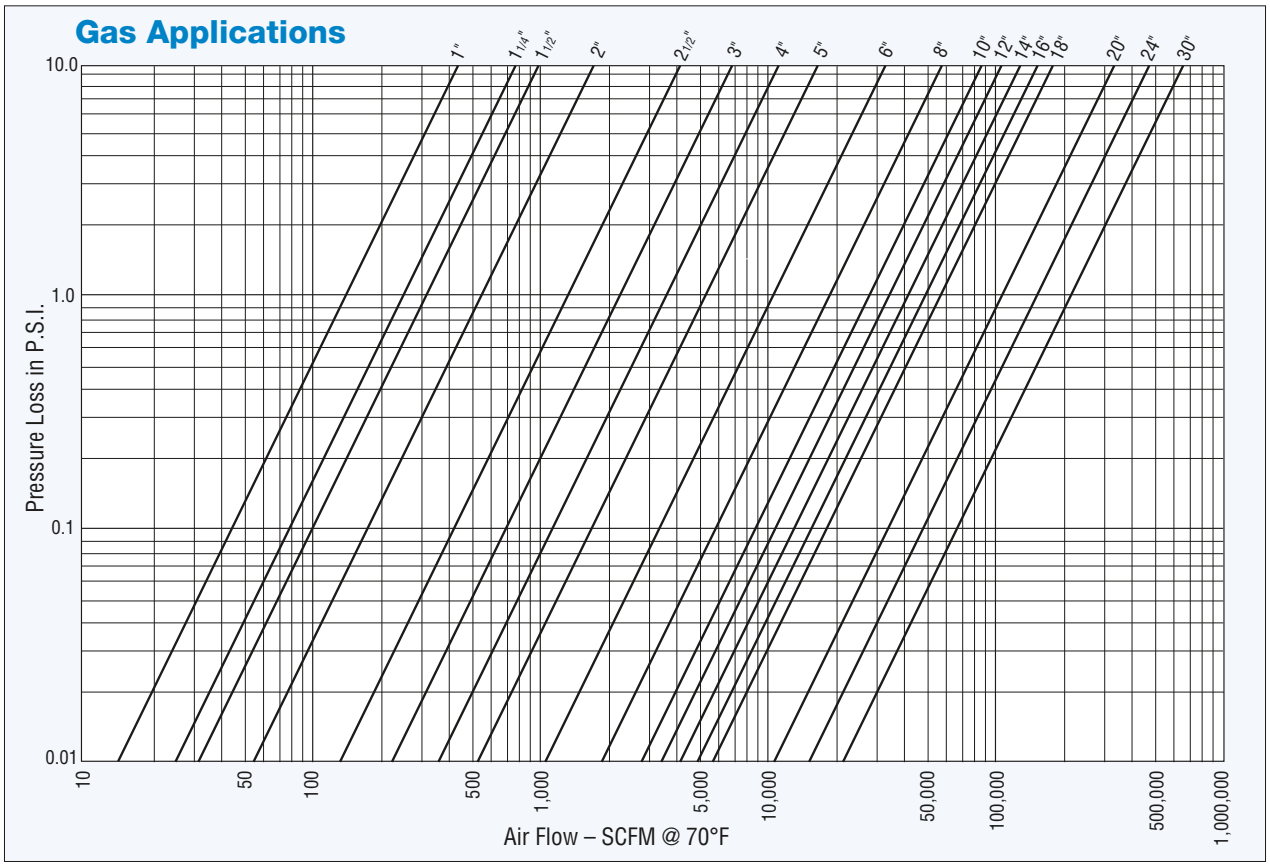

Pressure Losses for Gas Applications are based on valves without optional springs.

ISO 9001 : 2015

US Valve LLC
812E Oregon Avenue
Linthicum, MD 21090

T: 410.789.0999
F: 410.789.1009
info@usvalve.com
www.usvalve.com

Maximizing the Flow

No. 2301014-06/23