ISO 9001 : 2008

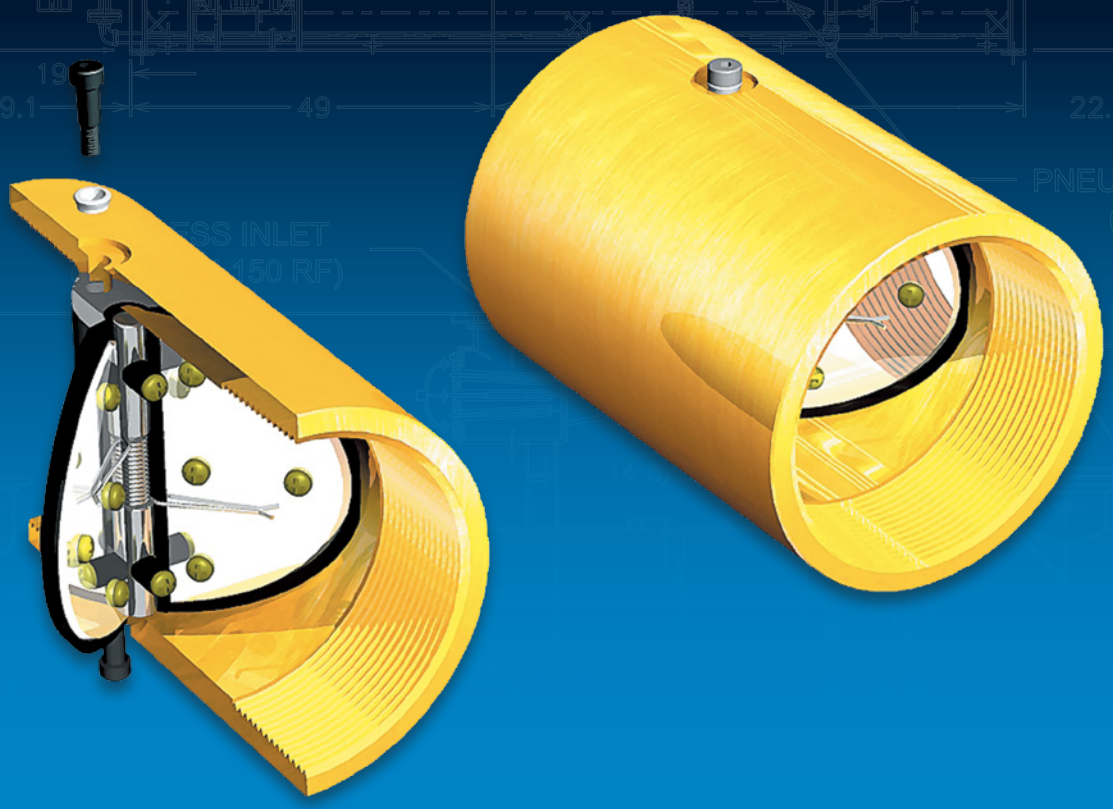

Deep Well Check Valves

Full Port — Lowest Pressure Drop

Maximizing the Flow

Full Port, Lowest Pressure Drop

Full Port Check Valves provide more flow and lower pressure drops than conventional check valves. Our elastomer hinge check valve design takes performance to an entirely new level by eliminating the restrictive valve seat and substantially increasing the valve's open area and flow coefficient (Cv). The resulting flow is more laminar, with lower pressure loss and reduced turbulence.

Valve Testing

Every elastomer hinge check valve we manufacture is assembled, inspected and tested in our plant in Maryland -USA. Our commitment to quality assures you the performance and reliability you demand and expect. Material test reports and test certificates are available on request.

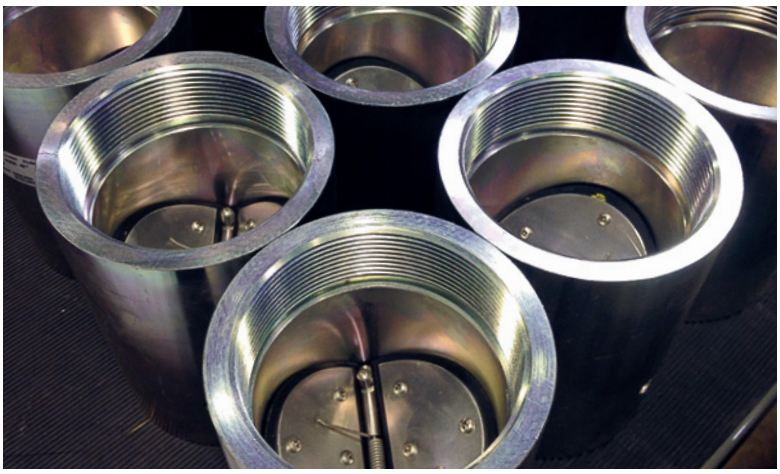

US Valve Deep Well Check Valves are designed to support up to 1000 feet of pipe plus the weight of your typical well pump.

US Valve LLC — The Right Choice

US Valve is a New Jersey Corporation with headquarters in New Jersey and manufacturing locations in Maryland–USA, Europe and Asia. Our primary focus is check valves and our roots are grounded in low pressure drop designs. Our application engineers can assist you in making the right choice of valve for your application.

Low Price, Delivery & Service

We want to be your supplier of Full Port, Low Pressure Drop Check Valves, so we offer *Competitive Pricing, Fast Delivery* and *Outstanding Service.* We maintain an extensive inventory of valves, parts and components in a wide variety of materials so we can respond to your needs quickly. Valves are typically assembled and tested within 1 to 2 days after receipt of an order.

We can say with confidence that our customer service is the best in our industry. Give us a chance to prove it.

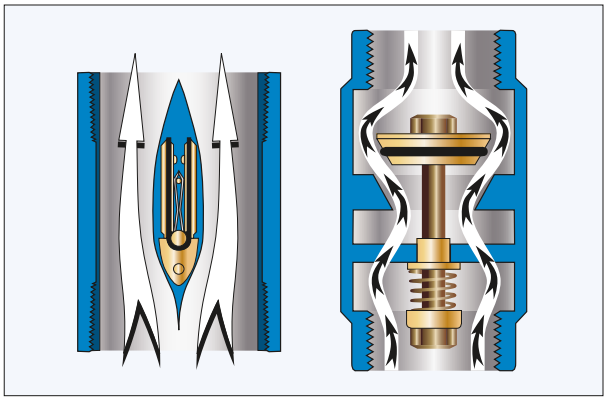

US Valve Design
Open flow path, low ΔP, more laminar flow

Conventional Design
Restricted flow path, high ΔP, increased turbulence

Features & Benefits

Full Port Check Valves offer some impressive advantages over other types of check valves.

- **Low Pressure Drop (High Cv)**

Our elastomer hinge check valves have larger open area than other designs, thus providing higher capacity and lower pressure drops than swing and lift check, or even traditional dual plate wafer designs.

- **ARRA Compliant**

USA content, substantial transformation and local assembly makes our Full Port Check Valves ARRA compliant for government funded projects.

- **Alleviates Water Hammer**

When spring activated, our discs are designed to close 33% faster than standard dual disc check valves due to the fact that they are closed at a 30 degree angle. This makes for an effective non-slam design when installed in liquid applications.

ISO9001:2008 Certified

US Valve is **ISO 9001:2008 Certified.** We always keep our certification current. We take our commitment to product quality and documentation seriously. You can rest comfortably knowing that we provide only the best to our customers.

Don't see what you're looking for?

We stock and source thousands of valves and components in various sizes and materials not shown here.

Please contact us to discuss options:
+1.410.789.0999 • usv-info@idexcorp.com

Valve Dimensions

Size	A	B	C
1	1.58	3.25	1.60
1 ¼	1.94	3.50	2.00
1 ½	2.19	3.50	2.20
2	3.00	5.00	3.10
2 ½	3.40	5.50	3.50
3	4.00	6.00	4.10
4	5.25	7.00	5.25
5	6.25	8.00	6.25
6	7.50	9.00	7.50
8	9.63	11.00	9.63

All dimensions in inches. Consult Factory for larger sizes.
Dimensions subject to change without notice.

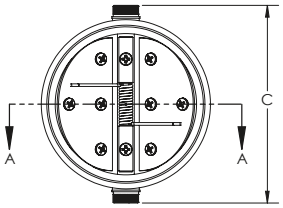

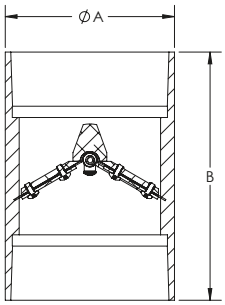

Exploded View

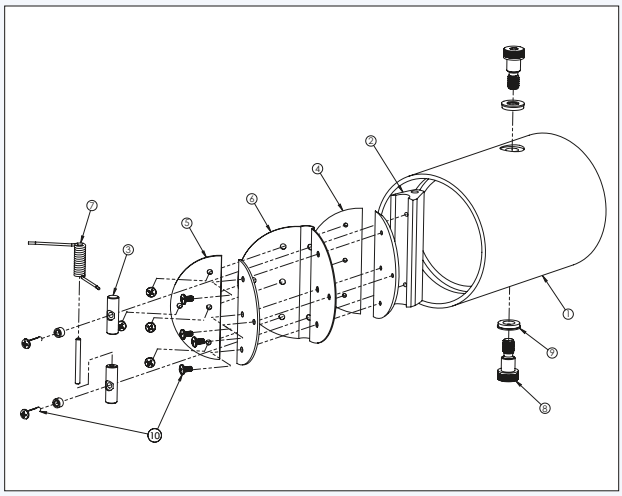

Part No.	Part Description
1	Body (FNPT Shown)
2	Wing Support
3	Spring Pin
4	Disc
5	Back-up Disc
6	Elastomer Seal
7	Spring
8	WS/LM Fastener
9	Sealing Washer
10	Internal Fasteners

Standard Models and Materials

Sizes	– Model –	Material Code	Elastomer Seal Code	Spring Code	Options
3"– 6"	**– 17 –**	**14**	**B**	**SP**	**(1)**
1"– 12"	**– 17 –**	**44**	**B**	**SP**	

Material Code	Body	Disc	Wing Support	MAWP(2)
14	Carbon Steel ASTM A106 Gr. B	316 Stainless Steel ASTM A240	316 Stainless Steel ASTM A276	450 PSI
44	Stainless Steel ASTM A312 Gr. 316	316 Stainless Steel ASTM A240	316 Stainless Steel ASTM A276	450 PSI

Elastomer Seal Code	Material	Temp. Range
B	Buna-N	-60°F to 225°F

Spring Code	Nomenclature
SP	SS 316 Spring

(1) Consult factor for additional materials, options, special paint, drain holes, special springs and more.
(2) MAWP — Maximum Allowable Working Pressure at 60°F
All springs/wing pins and hardware of 316 stainless steel.

ISO 9001 : 2008

Pressure Losses

Liquid Applications

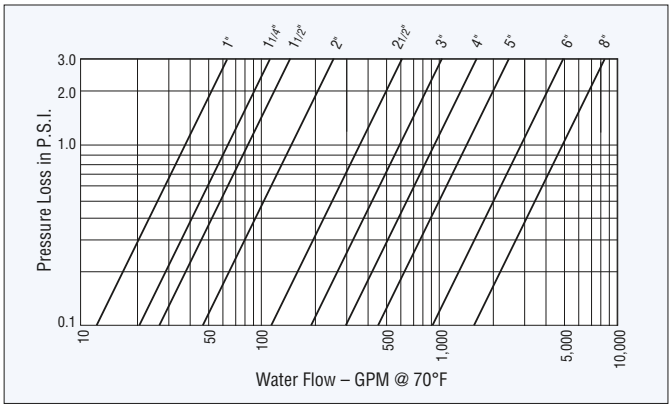

Gas Applications

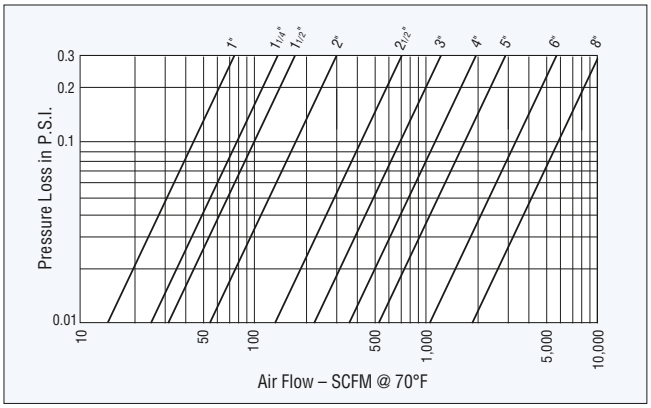

Pressure Losses for Gas Applications are based on valves without optional springs.

US Valve Flow Coefficients (Cv) vs. Conventional Designs

Size	US Valve Full Port Dual Disc	Conventional Swing Check Design	Conventional Lift Check Valve
1	**37**	22	17
1 ¼	**65**	39	—
1 ½	**83**	55	35
2	**145**	65	63
2 ½	**350**	90	100
3	**590**	135	148
4	**920**	215	260
5	**1400**	680	415
6	**2800**	1270	620
8	**4900**	2350	1030

Check Valve Flow Coefficient Comparisons (Cv) — GPM of water @ 60°F and 1 PSI Pressure Drop

US Valve LLC
812E Oregon Avenue
Linthicum, MD 21090

T: 410.789.0999
F: 410.789.1009
info@usvalve.com
www.usvalve.com

Maximizing the Flow

No. 2301016-07/23