StreamMaster II™ Monitor

AKRON BRASS COMPANY

Style #3480 2000GPM (7600 lpm)
Style #3482 1250GPM (4800 lpm)

With its patented design, the StreamMaster II provides efficient flows up to 2000 gpm (7600 lpm) in a compact configuration. The unique waterway design provides balanced forces on the outlet and reduced friction resulting in exceptional stream performance. The standard absolute position sensors provide advanced features like programmable obstacle avoidance, oscillation, and stow/deploy positions. The onboard, fully sealed IP 67 CAN control system features "plug and play" installation with built-in wireless capability and a USB port for quick software updates in the field. The 355 degree rotation and 165 degree elevation range can be configured for deck or aerial applications making this high performance compact monitor truly universal.

- Compact industry leading operating envelope (6", 152 mm)
- Lightweight Pyrolite construction
- Simple "plug and play" installation
- Integrated wireless compatibility, utilizing the optional hand-held remote control
- Manual override hand-wheels
- Absolute position sensors
- Waterproof (IP 67 rated) control system with locking connectors
- User programmable obstacle avoidance
- User programmable stow and deploy positions
- Superior range of motion
  - Rotation Range 355°
  - Elevation Range +120°, - 45°
- 12V or 24V operation
- Compatible with 3406 Electric Riser
- Ladder avoidance mode - Optional



Style 3480
Shown with
5178 Nozzle

US Patent
8,678,022

Style	Weight lbs. (kg)	Height	Width	Depth	Inlet	Outlet	FLOW GPM	FLOW LPM
3480	40.7 (18.5 kg)*	16" (400 mm)	11 1/8" (295 mm)	17" (430 mm)	4" Flange (DN100)	3 1/2" Male (89mm)	2000	7600
3482	38.2 (17.3 kg)*	16" (400 mm)	11" (280 mm)	16 1/8" (410 mm)	3" Flange (DN80)	2 1/2" Male (65 mm)	1250	4800

* Less nozzle

NOZZLE OPTIONS

*For 2000 GPM only



Style 3499* | Style 2499 | Style 2498 | Style 3485 MiniShaper | Style 1578 SaberMaster Nozzle* | Style 5178 Akromatic 2000 Nozzle | Style 5177 Akromatic 1250 Nozzle | Style 4040, 4042* Akrochem Nozzle | Style 4480

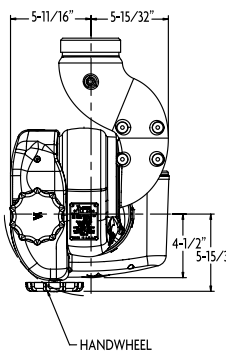

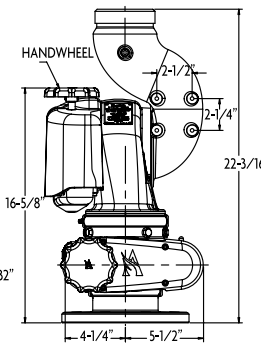

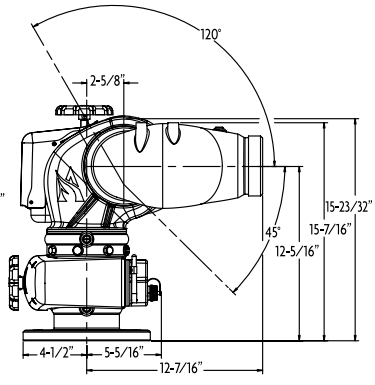

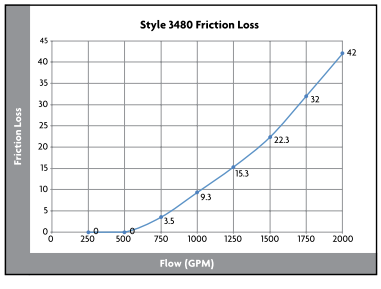

IDEX FIRE & SAFETY