ISO 9001 : 2015

Dual Plate Wafer Check Valves

API 594 Design – API 598 Tested

Maximizing the Flow

Dual Plate Wafer Check Valves The Industry Standard

Dual Plate Wafer Check Valves were originally introduced in the late 1950s and quickly became the check valves of choice for many piping engineers because of their proven reliability and low pressure drops. They have become the standard for process and project engineers worldwide and are used extensively in Power Plants, Refineries, Chemical Plants, Wastewater Treatment Plants and Pulp & Paper Mills.

Our check valves conform to all industry standards. API 594 dictates valve dimensions, including wall thickness, face-to-face dimensions and OD, so valves can replace any make of ANSI Dual Plate Water Check Valve.

API 594 Design — API 598 Tested

Every valve we ship is tested to API 598 and must meet or exceed all applicable API, ANSI and ASTM Standards. Our facilities are kept neat, clean and organized, with attention to detail that make the difference.

Our commitment to quality assures you the performance and reliability you demand and expect. Material test reports and hydrotest certificates are available.

U.S. Valve LLC — The Right Choice

US Valve is a New Jersey Corporation with headquarters in New Jersey and manufacturing locations in Maryland–USA, Europe and Asia. Our primary focus is check valves and our roots are grounded

in low pressure drop designs. Our application engineers can assist you in making the right choice of valve for your application.

Value, Delivery & Service

We want to be your supplier of Dual Plate Wafer Check Valves, so we offer *Competitive Pricing, Fast Delivery* and *Outstanding Service.* We maintain an extensive inventory of valves, parts and components in a wide variety of materials so we can respond to your needs quickly.

We can say with confidence that our customer service is the best in our industry. Give us a chance to prove it.

ISO9001:2015 Certified

US Valve is **ISO 9001:2015 Certified.**

We always keep our certification current. We take our commitment to product quality and documentation seriously. You can rest comfortably knowing that we provide only the best to our customers.

Features & Benefits

Dual Plate Wafer Check Valves offer some impressive advantages over other types of check valves.

• Low Pressure Drop (High Cv)
Dual plate wafer check valves have larger open area than other designs, thus reducing pressure drop compared to swing, lift or other check valves.

• Light Weight
Reduces weight by 80–90% compared to conventional Flanged check valves.

• Lower Cost
Light weight, compact profiles and the elimination of flanges allows DPW check valves to be manufactured more economically than other designs, especially as pipe diameters increase.

• Alleviates Water Hammer
Our spring activated discs are designed to close our valves quickly. This assures high performance, eliminating chatter and creating dynamic responsiveness in a non-slam design.

• Simple Installation
Easier to install, remove and replace in both new and existing piping systems.

• Retainerless Design
Ideal for critical applications where valve body penetration and the possibility of leakage cannot be tolerated.

Industries Served

- Water and Wastewater
- Power Generation
- Petroleum Refining
- Oil & Gas Production
- Steel/Primary Metals
- Petrochemicals
- Chemicals
- Pharmaceuticals
- Pulp & Paper
- Marine

Valve Dimensions

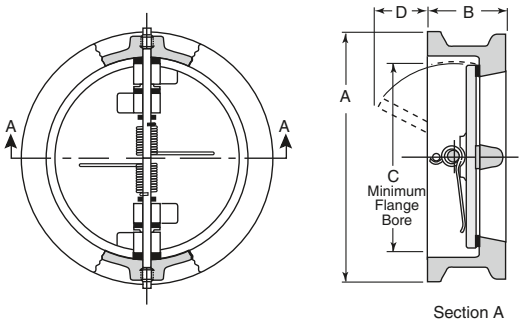

Direction of Flow

This view is rotated 90° to show the actual operating position of the valve. The pin must be vertical for horizontal flow.

Dual Plate Wafer valves are designed with flangeless bodies with short face-to-face dimensions per API 594. They are clamped between mating flanges which are connected by studs and nuts.

ASME Class 125 (Flat Face)

Size	A	B	C	D	Wt (lbs)
2	4 1/8	2 1/8	2 1/16	—	4
2 1/2	4 7/8	2 1/8	2 15/32	—	6
3	5 3/8	2 1/4	3 1/16	5/8	7
4	6 7/8	2 1/2	4	1	12
5	7 3/4	2 3/4	5	1 5/16	15
6	8 3/4	3	6 1/16	1 15/16	20
8	11	3 3/4	8	3 7/16	40
10	13 3/8	4 1/4	10	3 3/8	65
12	16 1/8	5 5/8	11 15/16	3 9/16	110
14	17 3/4	7 1/4	12 1/2	3 1/16	183
16	20 1/4	7 1/2	15	4 1/4	255
18	21 5/8	8	16 7/8	5 3/8	315
20	23 7/8	8 3/8	18 13/16	6 3/16	380
24	28 1/4	8 3/4	22 5/8	8 1/4	575
30	34 3/4	12	29 1/4	9 9/16	1070
36	41 1/4	14 1/2	35	12 5/16	1962
42	48	17	41	15	2800
48	54 1/2	20 5/8	47	16 3/4	3920
54	61	21 1/4	51 1/2	19 3/4	6172
60	67 1/2	26	56	—	7800

ASME Class 150 (Raised Face with Serrations)

Size	A	B	C	D	Wt (lbs)
2	4 1/8	2 3/8	1 15/16	—	6
2 1/2	4 7/8	2 5/8	2 11/32	—	10
3	5 3/8	2 7/8	2 29/32	1/4	13
4	6 7/8	2 7/8	3 53/64	5/8	17
5	7 3/4	3 3/8	4 13/16	7/8	27
6	8 3/4	3 7/8	5 49/64	1 3/8	35
8	11	5	7 5/8	2 1/8	70
10	13 3/8	5 3/4	9 9/16	2 3/4	106
12	16 1/8	7 1/8	11 3/8	3 1/4	172
14	17 3/4	7 1/4	12 1/2	3 1/4	200
16	20 1/4	7 1/2	15	4 7/16	275
18	21 5/8	8	16 7/8	5 3/8	315
20	23 7/8	8 5/8	18 13/16	6 5/16	435
24	28 1/4	8 3/4	22 5/8	8 1/4	620
30	34 3/4	13	29 1/4	9	1230
36	41 1/4	15 1/4	35	11 15/16	2017
42	48	17	41	15	2800
48	54 1/2	20 5/8	47	16 3/4	3920
54	61	21 1/4	51 1/2	19 3/4	6172
60	67 1/2	26	56	—	7800

ASME Class 300 (Raised Face with Serrations)

Size	A	B	C	D	Wt (lbs)
2	4 3/8	2 3/8	1 15/16	—	7
2 1/2	5 1/8	2 5/8	2 11/32	—	11
3	5 7/8	2 7/8	2 29/32	1/4	15
4	7 1/8	2 7/8	3 53/64	5/8	18
5	8 1/2	3 3/8	4 13/16	7/8	35
6	9 7/8	3 7/8	5 49/64	1 3/8	45
8	12 1/8	5	7 5/8	2 1/8	82
10	14 1/4	5 3/4	9 9/16	2 3/4	125
12	16 5/8	7 1/8	11 3/8	3 1/4	200
14	19 1/8	8 3/4	12 1/2	3 3/16	325
16	21 1/4	9 1/8	14 5/16	4 1/8	415
18	23 1/2	10 3/8	16 7/8	4 13/16	555
20	25 3/4	11 1/2	17 15/16	5 5/8	725
24	30 1/2	12 1/2	21 9/16	7 1/16	1100

ASME Class 600 (Raised Face with Serrations)

Size	A	B	C	D	Wt (lbs)
2	4 3/8	2 3/8	1 15/16	—	7
2 1/2	5 1/8	2 5/8	2 11/32	1/8	11
3	5 7/8	2 7/8	2 29/32	1/4	15
4	7 5/8	3 1/8	3 53/64	7/8	26
5	9 1/2	4 1/8	4 13/16	1	50
6	10 1/2	5 3/8	5 49/64	1 7/16	80
8	12 5/8	6 1/2	7 5/8	2	135
10	15 3/4	8 3/8	9 9/16	2 9/32	238
12	18	9	11 3/8	3 15/32	333
14	19 3/8	10 3/4	12 1/2	2 3/4	455
16	22 1/4	12	14 5/16	4 5/16	640
18	24 1/8	14 1/4	16 1/8	3 11/16	890
20	26 7/8	14 1/2	17 15/16	5 5/16	1120
24	31 1/8	17 1/4	21 9/16	6 9/16	2040

For other sizes and pressure classes contact factory. Class 125 face-to-face dimensions 2-½"-12" are thinner than the requirements of API 594 and are in accordance with industry standards.

ASME B16.34 Pressure-Temperature Ratings
Steel and Stainless Steel

Temperature	Maximum Non-Shock Service Pressure psi (ASME B16.34)					
	Class 150		Class 300		Class 600	
°F	Steel (1)	316SS	Steel (1)	316SS	Steel (1)	316SS
	psi	psi	psi	psi	psi	psi
-20 to 32	285	275	740	720	1480	1440
32 to 100	285	275	740	720	1480	1440
200	260	235	680	620	1360	1240
300	230	215	655	560	1310	1120
400	200	195	635	515	1265	1025
500	170	170	605	480	1205	955
600	140	140	570	450	1135	900
650	125	125	550	440	1100	885
700	110	110	530	435	1060	870
750	95	95	505	425	1015	855
800	80	80	410	420	825	845
850	65	65	320	420	640	835
900	50	50	230	415	460	830
950	35	35	135	385	275	775
1000	20	20	85	365	170	725
Hydro Shell Test	450	425	1125	1100	2225	2175

For latest information please refer to ASME B16.34.
(1) Permissible, but not recommended for prolonged use above 800°F (427°C)

Valve Coefficients (Cv)

Valve Coefficients – Cv			
Valve Size	Class 125 – 600	Valve Size	Class 125 – 600
2”	75	16”	8690
2 ½”	95	18”	10940
3”	191	20”	14290
4”	377	24”	23000
5”	483	30”	37200
6”	821	36”	59000
8”	1590	42”	92000
10”	2920	48”	126000
12”	4470	54”	186000
14”	5870	60”	217000

Valve Numbering, Nomenclature and Ordering Information

Valve Numbering

Size		Style		Body	Internals	Seat	Spring	Class
24	–	31	–	4	4	V	SP	30

Description: The above valve would be a 24 inch valve with a Standard Body Style (31), 316 Stainless Steel Body (4), 316 SS Internals (4), Viton Seat (V), 316 SS Standard Torque Spring (SP) and Class 300 Rating (30). The Part Number would be designated as follows: **24-31-44VSP30.**

SIZE (inches)	
Code	**Nomenclature**
	2"–36" (consult factory for additional sizes)

SEAT	
Code	**Nomenclature**
E	EPDM
V	Viton
M	Metal
MS	316 SS API Trim 10

STYLE	
Code	**Nomenclature**
31*	Standard Body DPW
31R	Retainerless Body DPW

* Consult US Valve for availability.

SPRING	
Code	**Nomenclature**
SP	316 SS Standard Torque
SX	Inconel X-750

BODY / INTERNALS	
Code	**Nomenclature**
1	Carbon Steel ASTM A216 Gr. WCB
4	316 SS ASTM A351 Gr. CF8M
7	Ductile Iron ASTM A536 Gr. 65-45-12

CLASS	
Code	**Nomenclature**
12	Class 125
15	Class 150
30	Class 300
60	Class 600

Standard vs. Retainerless Body Designs

Our Dual Plate Wafer Check Valves are available in two different body styles — **Standard** and **Retainerless**. Both versions have the same performance, dimensions and ratings.

In all dual plate check valves, the center pin (off which the discs rotate) and the limiter bar (which prevents the discs from hitting each other) need to be affixed to the valve body. In a standard body style, the result is a penetration through the body wall. In a retainerless design, a sleeve is inserted into the inside of the body, thus avoiding penetrating the body wall. This makes retainerless style valves particularly desirable and applicable for critical Hydrocarbon and Chemical processing applications, or any service where environmental safety or fire hazards are concerned.

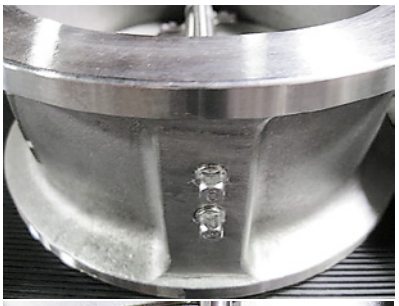

Retainer Style has body penetrations, as shown to the right.

Retainerless valves have no body penetrations, which is preferable in critical applications.

Pressure Drop Information

• The curves show pressure drops available with standard torque springs and horizontal flow.

• Dual Plate Wafer Check Valves should be installed in horizontal flow with pins vertical for best performance. For other installations, contact the factory.

• Each piping system has a unique geometry which should be evaluated whenever the liquid media velocity exceeds 8 feet/second through a fitting or expansion directly upstream of the valve. Where practicable, for maximum service life, and based on actual service, a minimum of one (1) to five (5) pipe diameters distance should be maintained between the valve and the pump discharge and pipe fittings. Optimum flow velocity for liquids is 3–11 ft/sec. Gas velocity should be maintained between 20–250 ft/sec.

• Systems with drastic flow decelerations may require higher torque springs for faster valve response and to reduce water hammer for non-slam applications. For low pressure gas applications, minimum torque springs are available. Please consult the factory.

• We can evaluate Dual Plate Wafer Check Valves relative to your system behavior.

For Liquid Applications

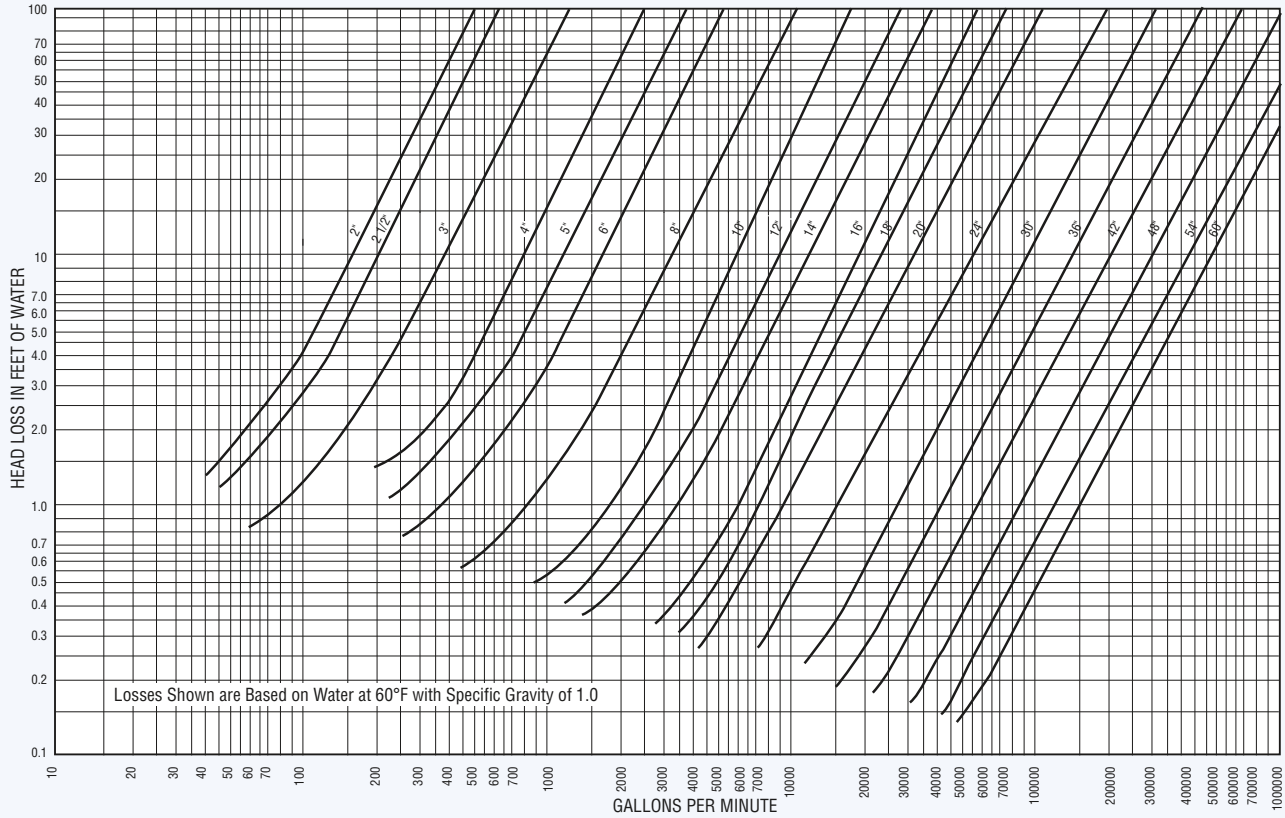

For Gas Applications

$$\Delta P = \frac{GT}{P}\left(\frac{Q}{1360Cv}\right)^2 + Pc$$

$$SCFH = ACFH\left(\frac{P}{14.7}\right)\left(\frac{520}{T}\right)$$

Where:

Cv = Flow Coefficient
G = Specific Gravity of Gas
P = Inlet Pressure in psia (psig + 14.7)
ΔP = Pressure Drop Across Valve in psi
Pc = Cracking Pressure

Q = Gas Flow Rate in SCFH
T = Absolute Temperature (°F + 460)
ACFH = Actual Cubic Feet per Hour
SCFH = Standard Cubic Feet per Hour

ISO 9001 : 2015

US Valve LLC
812E Oregon Avenue
Linthicum, MD 21090

T: 410.789.0999
F: 410.789.1009
info@usvalve.com
www.usvalve.com

Maximizing the Flow

No. 2301011-07/23