US Valve TECHNO CHECK VALVES

Elastomer-Hinged Wafer-Style Check Valves

Low pressure loss, lightweight design with compact construction

TECHNOLOGY

TECHNO — A well-known Brand with Past History and a Brand New Future!

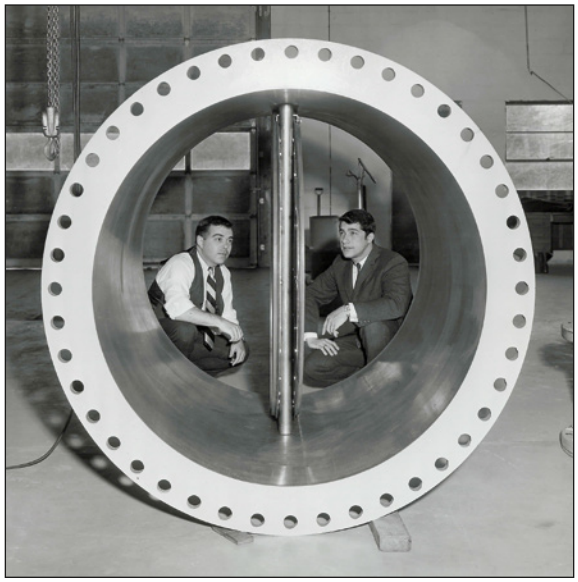

- Techno Corporation of Erie, Pa. founded in 1952
- Inventor of Elastomer Hinge Dual Plate Check Valve providing for much improved flow at lowest pressure drops.
- Design first patented on November 20, 1952
- Grew to be one of the largest and most famous manufacturers of check valves in the United States.
- Acquired by Newflo Corporation on 12/4/1992. Remained in Erie Pa under same management.
- Mid 1996 Newflo (including Techno Corporation) was acquired by PCC (Precision Castparts Corporation).
- PCC moved Techno to Milbury, Mass in 1999 combining them with TBV (Titanium Ball Valve Co.) in a 54,000 ft^2 facility.
- Techno (along with TBV) was acquired by Cameron International in 2004.
- Techno product line transferred to Cameron Valve and Measurement's 250,000 ft^2 plant in Oklahoma City in 2010.
- US Valve LLC acquires Techno product line from Cameron in April of 2016.
- We are now entirely focused on producing low pressure drop check valves in our Linthicum, Maryland facility.
- Lead times are now a priority with > 100,000 parts in stock and options for same day shipment of most valves.

FEATURES

Design Features

- The stationary hinge-post and hinge-clamp design reduces wear to hinges, pins, valve seats, springs and the need for routine maintenance.
- The valve plate design reduces travel from a fully open to fully closed position and provides complete metal-to-metal valve plate structural support, resulting in a non-slam, quick closure feature.
- Our unique flexible elastomer seal provides final closure around the valve bore with continuous strength and durability to ensure prolonged cycle life, outwearing traditional metal-seated valves.

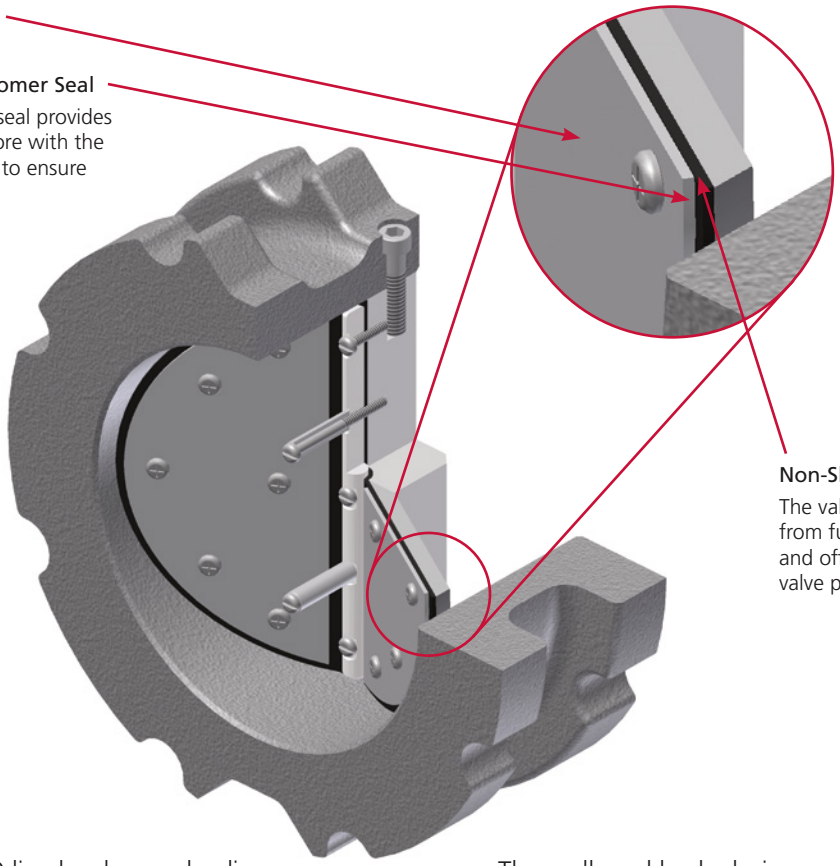

US Valve's TECHNO line has been a leading supplier of high-quality check valves to the industry for many years. A large number of TECHNO products are presently in service, demonstrating a superior performance record.

The TECHNO check valve design, combined with an extensive selection of materials, results in high performance and reliability for most liquid and gas applications.

The elastomer-hinged TECHNO wafer-style check valve offers compact design along with heavy-duty construction.

The scalloped body design ensures proper and easy alignment between mating gaskets and line flanges. It offers strength and reduces the need for expensive supports, expansion joints and foundations that may be necessary with a conventional check valve.

Our unique design, combined with years of experience, allows us to satisfy some of the most difficult applications.

Other configurations are available upon request.

TECHNO CHECK STYLES 5118 AND 5296

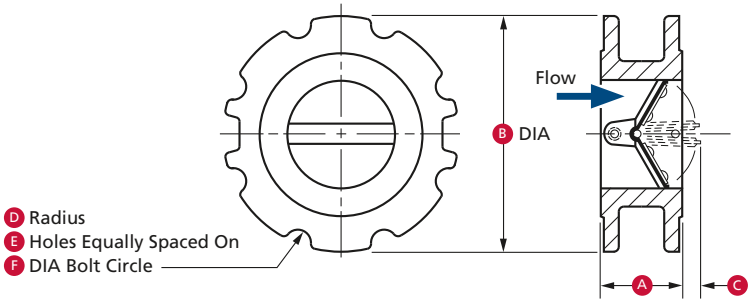

Standard Models and Materials

Style	Body	Internals	Flange Class	Cold Working Pressure (psi)
5118	Cast Iron	Aluminum	125 (FF)	125
5118	Cast Iron	316 S/S	125 (FF)	125
5296	Steel	316 S/S	150 (RF)	150
5296-AL	Aluminum	Aluminum	125 (FF)	125
5296-316	316 S/S	316 S/S	150 (RF)	150

(FF) = Flat Face
(RF) = Raised Face

General Dimensions for Style 5118

Valve Size (in.)	A	B	C	D	E	F
2	1-3/8	4-3/4	1/2	3/8	4	4-3/4
2-1/2	1-5/8	5-1/2	9/16	3/8	4	5-1/2
3	1-7/8	6	11/16	3/8	4	6
4	2-3/8	7-1/2	7/8	3/8	8	7-1/2
5	2-7/8	8-1/2	1-1/8	7/16	8	8-1/2
6	3-3/8	9-1/2	1-1/2	7/16	8	9-1/2
8	4-3/8	11-3/4	2-1/4	7/16	8	11-3/4
10	5-3/8	14-1/4	2-1/2	1/2	12	14-1/4
12	6-3/8	17	3	1/2	12	17
14	7-3/8	18-3/4	3-1/4	9/16	12	18-3/4
16	8-3/8	21-1/4	3-3/4	9/16	16	21-1/4
18	9-3/8	22-3/4	4-1/4	5/8	16	22-3/4
20	10-3/8	25	4-3/4	5/8	20	25
24	12-3/8	29-1/2	5-3/4	11/16	20	29-1/2
30	15-3/8	36	7-3/4	11/16	28	36
36	18-3/8	42-3/4	8-1/2	13/16	32	42-3/4

All dimensions are in inches.

Available Materials

Internal Materials

- Aluminum
- 316 Stainless Steel

Sealing Member Materials

MATERIAL	TEMPERATURE RANGE**
• Buna-N	-60° F to 225° F (-51° C to 107° C)
• EPDM	-40° F to 300° F (-40° C to 149° C)
• FKM (Viton®)	-20° F to 400° F (-29° C to 204° C)
• Silicone	-100° F to 500° F (-73° C to 260° C)

**** This temperature range is for general guidance. The figures may vary with application.**

Spring(s) Are Optional.

- Material is 302 or 316 Stainless Steel.

TECHNO CHECK STYLE 5296

For sizes 2" to 12", check valves with carbon steel, 316 SS or aluminum bodies are known as Style 5296.

They are rated at 150 psi cold working pressure. Carbon steel and stainless steel have raised-face ends. Aluminum bodies have flat face ends. Bodies are made from solid round material and do not have the scalloped edges like the 5118 which is produced from a casting.

The outside diameter is made to fit within the bolting pattern of ASME 150# flanges.

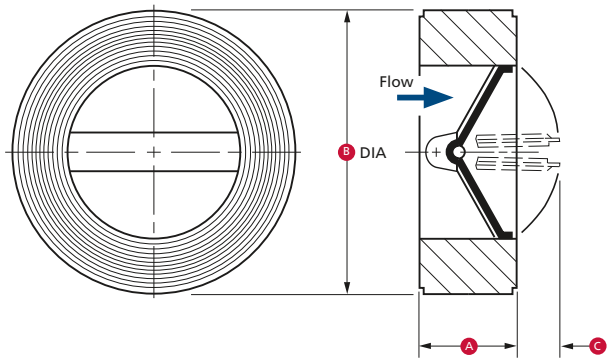

General Dimensions for Style 5296

Valve Size (in)	A	B	C
2	1-3/8	4-1/8	1/2
2-1/2	1-5/8	4-7/8	9/16
3	1-7/8	5-3/8	11/16
4	2-3/8	6-7/8	7/8
5	2-7/8	7-3/4	1-1/8
6	3-3/8	8-3/4	1-1/2
8	4-3/8	11	2-1/4
10	5-3/8	13-3/8	2-1/2
12	6-3/8	16	3

All dimensions are in inches.
For weights by model, see page 6.

Don't see what you're looking for?

We stock and source thousands of valves and components in various sizes and materials not shown here.

Please contact us to discuss options:
+1.410.789.0999 · usv-info@idexcorp.com

PART NUMBERING

Sizes [2]	– Style	Material Codes	Elastomer Seal Codes	Spring Codes	Valve Rating	End Connection	Options
2" – 30"	–EHW	CIAL	U[3] or S	NS or 36	125	FF	(1)
6" – 24"	–EHW	CI36	U[3] or S	NS or 36	125	FF	

(1) Consult factory for additional options, special paint, drain holes, special springs & more
(2) Other sizes, consult factory
(3) EPDM seal, 12"– 24" only, other sizes consult factory

Example:

Sizes [2]		Style	Material Codes	Elastomer Seal Codes	Spring Codes	Valve Rating	End Connection		Options[1]
6	–	EHW	CIAL	S	36	125	FF	–	

The above valve would be 6" diameter, Wafer style (EHW), Cast Iron body (CI), Aluminum Internals (AL), Silicone Elastomer Seal (S), 316 SS Standard Torque Spring (36), ASME Class 125 body (125), with Flat Faces (FF).
It would be designated **6-EHWCIALS36125FF**.

Material Codes

Material Code	Body	Disc	Wing Support	Body Style	MAWP*
CIAL	Cast Iron ASTM 126 Gr.B	Aluminum ASTM B209 6061T6	Aluminum 6061T6	5118	125 PSI
CI36	Cast Iron ASTM 126 Gr.B	316 Stainless Steel ASTM A240	316 Stainless Steel ASTM A276	5118	125 PSI

* MAWP – Maximum Allowable Working Pressure @ 60°F
All spring/wing pins and internal hardware of 316 stainless steel. External hardware material dependent on body material.

Elastomer Seal Code	Material	Temp. Range
U	EPDM	-40°F to 250°F
S	Silicone	-100°F to 500°F

Spring Code	Nomenclature
NS	No Spring
36	SS316 Spring

Valve Rating	Rating
125	ASME Class 125

End Connection	Connection
FF	Flat Face

Exploded View

Part No.	Part Description
1	Wafer Body (5118 Body Style Shown)
2	Wing Support
3*	Spring Pin
3**	Wing Pin
4	Disc
5	Back-up Disc
6	Elastomer Seal
7	Spring
8	Travel Stop
9	WS/LM Fastener
10	Sealing Washer
11	Internal Fasteners

Note: If valve is supplied with optional spring, use part number 3* (Spring Pin), otherwise use 3** (Wing Pin).

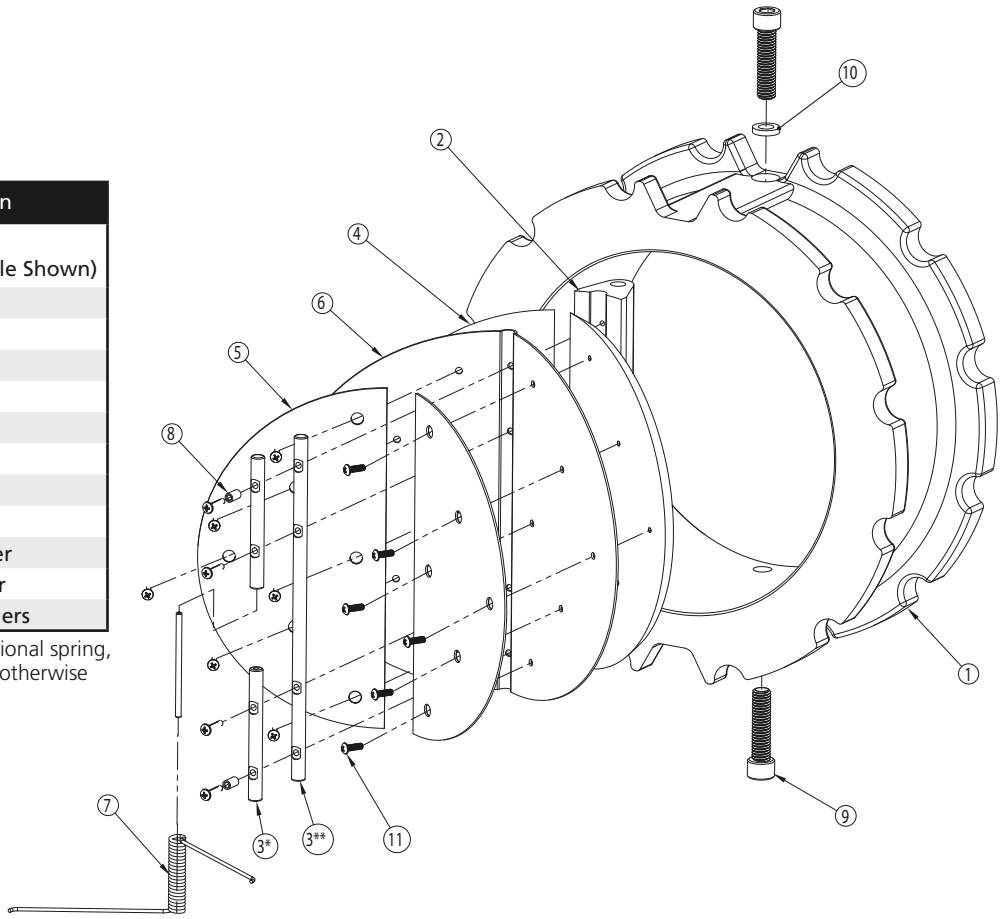

Techno™ Flow Coefficients (Cv) vs. Conventional Designs

Size	Techno Elastomer Hinge	Conventional Duo Disc Design	Conventional Swing Check Design	Conventional Lift Check Valve
1	37	—	22	17
1 ¼	65	—	39	—
1 ½	83	—	55	35
2	145	75	65	63
2 ½	350	95	90	100
3	590	190	135	148
4	920	375	215	260
5	1400	480	680	415
6	2800	820	1270	620
8	4900	1590	2350	1030
10	7200	2900	3850	1630
12	9000	4500	4750	2370
14	11000	5900	7400	3500
16	13000	8700	9550	5100
18	15000	10900	13000	6400
20	28000	14300	22000	7700
24	39000	23000	—	11100
30	58000	37000	—	—
36	75000	59000	—	—

Flow Coefficient Comparisons (Cv) – GPM of water @ 60°F and 1 PSI Pressure Drop. TECHNO is a trademark of US Valve.

Pressure Drop Charts for Water and Air Service

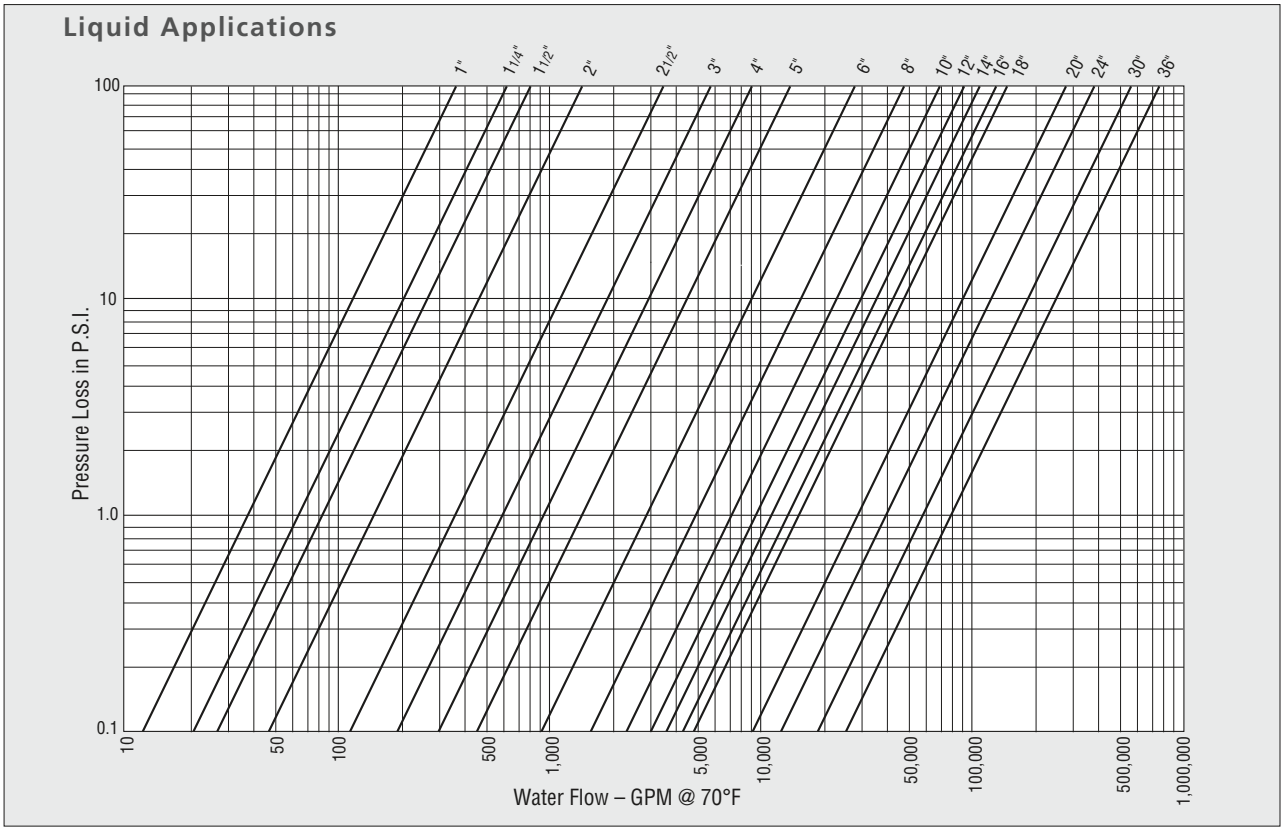

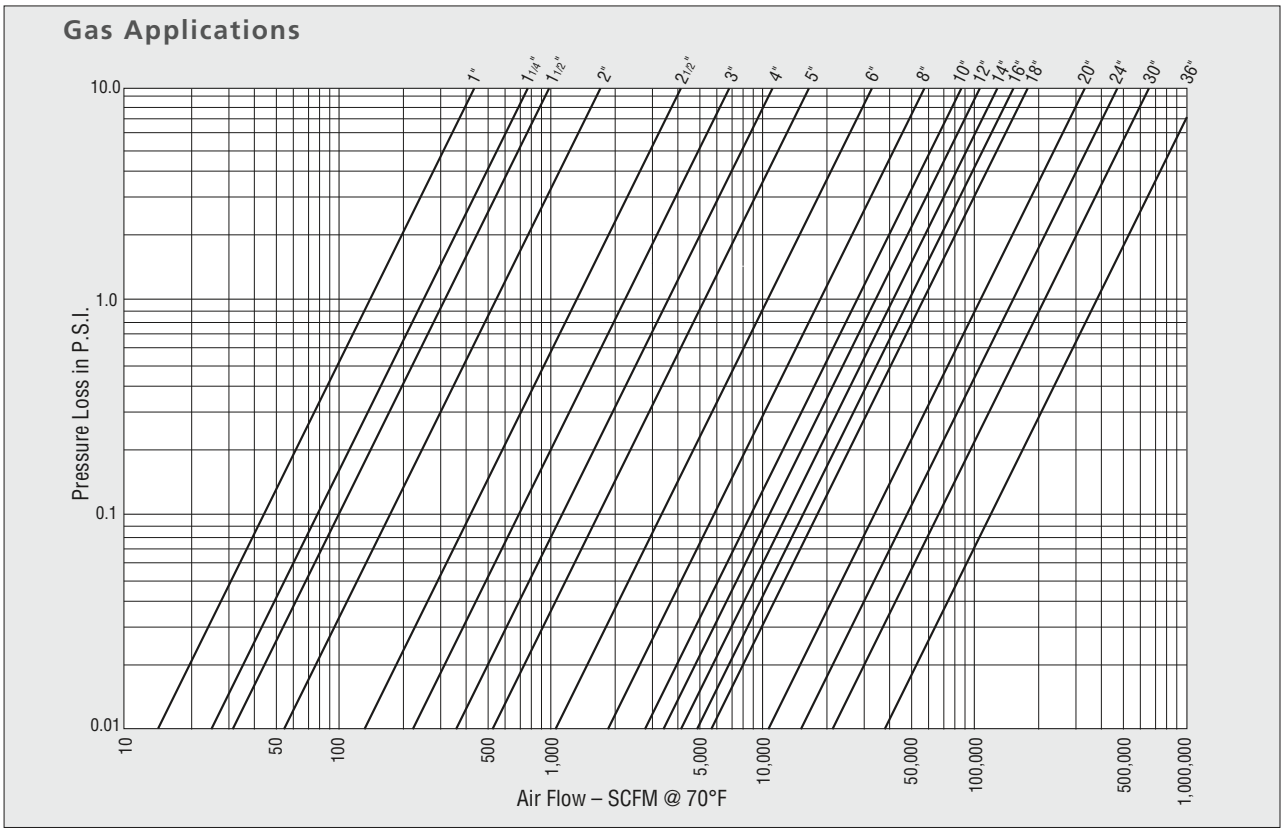

US Valve TECHNO CHECK VALVES

Techno Holdings LLC
812E Oregon Avenue
Linthicum, MD 21090

T: 410.636.3380
F: 410.789.1009
info@usvalve.com
www.usvalve.com

No. 2306039-06/23