# TECHNICAL SERVICE PARTS

STYLE 5148

PRODUCT OSCILLATING MERCURY 500

IF AN ITEM IS NOTED AS "NOT FIELD REPAIRABLE", OR YOU WISH TO RETURN AN ITEM TO AKRON BRASS FOR SERVICE PLEASE GO ONLINE TO, **ONLINEREPAIR.AKRONBRASS.COM**

| Chg. | Date |
|---|---|
| 04 | 08-22 |
| 05 | 03-26 |

*FOR 5148 NOZZLES PRODUCED PRIOR TO OCTOBER 2017*

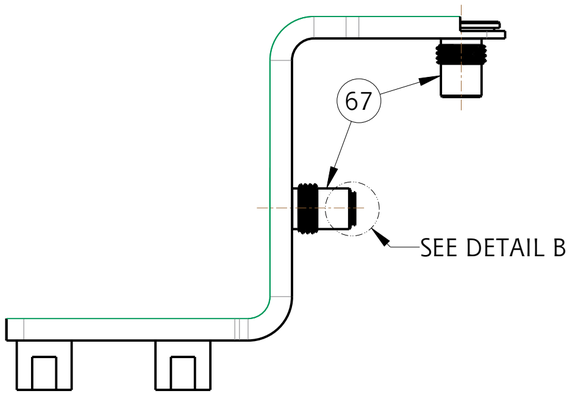


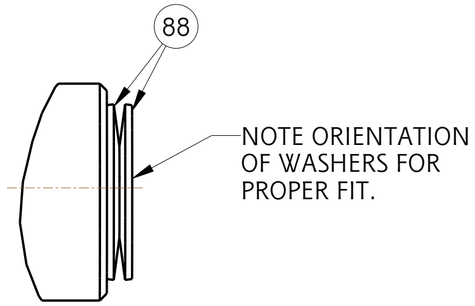


DETAIL B
SCALE 4.000

ASSEMBLY NOTES:

USE PARKER O-LUBE ON ALL O-RINGS AND MATING SURFACES UNLESS OTHERWISE NOTED.

1. USE PERMABOND LM-113 OR LOCTITE 222.
2. USE LOW-TEMP LUBRIPLATE.
3. STAMP LETTER "T" AFTER CALIBRATION.
4. ASSEMBLE JAM NUT (ITEM 61) AND ROD END (ITEM 59) ON ROD (ITEM 60) UNTIL SNUG. ASSEMBLE ROD END ON OPPOSITE END TIGHT. LOOSEN ROD END ON THE JAM NUT SIDE OF ROD UNTIL THE FACE OF THE ROD ENDS ARE PARALLEL TO EACH OTHER. TIGHTEN JAM NUT AGAINST ROD END TO HOLD IN PLACE.
5. USE LOCTITE #290 AT ASSEMBLY BETWEEN SHAFT AND ID OF BALL MAKE SURE T-HANDLE SETS FLUSH AGAINST TOP OF BALL.
6. USE PRIMER T AND PERMABOND HH120 OR LOCTITE 277.
7. LEVER (ITEMS 44 & 45) TO BE IN "OFF" POSITION (AS SHOWN ON PRINT) WHEN INSTALLING SCREWS (ITEM 47).
8. POSITION SET SCREW BETWEEN (2) BALLS AND TIGHTEN.
9. STAKE AT ASSEMBLY.
10. THOROUGHLY COAT WITH NEVER SEEZ MARINERS CHOICE.
11. THOROUGHLY CLEAN THREADS OF PLUG AND MATING PART THEN APPLY LOCTITE 425.
12. USE PERMABOND 737.

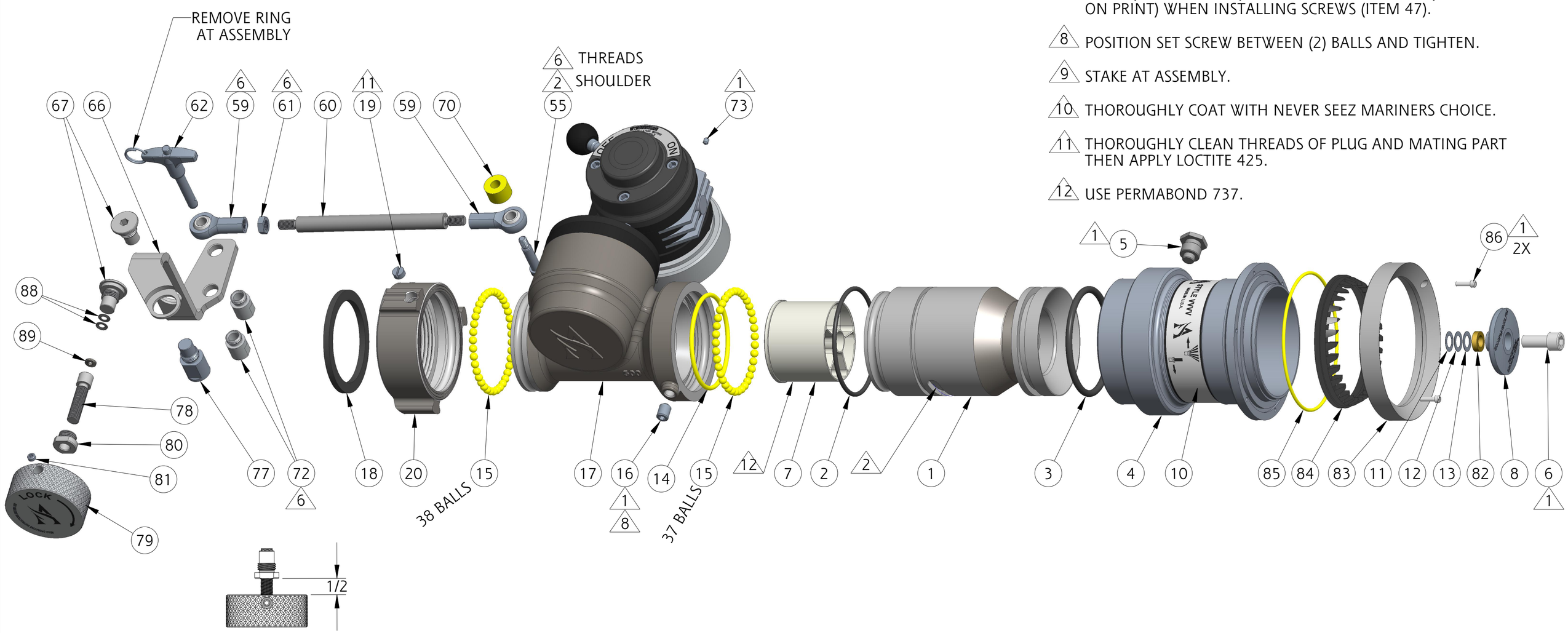


PHONE: 800.228.1161 | www.akronbrass.com

WARRANTY AND DISCLAIMER*: We warrant Akron Brass products for a period of five (5) years* after purchase against defects in materials or workmanship. Akron Brass will repair or replace product which fails to satisfy this warranty. Repair or replacement shall be at the discretion of Akron Brass. Products must be promptly returned to Akron Brass for warranty service. We will not be responsible for: wear and tear; any improper installation, use, maintenance or storage; negligence of the owner or user; repair or modification after delivery; failure to follow our instructions or recommendations; or anything else beyond our control. WE MAKE NO WARRANTIES, EXPRESS OR IMPLIED, OTHER THAN THOSE INCLUDED IN THIS WARRANTY STATEMENT, AND WE DISCLAIM ANY IMPLIED WARRANTY OF MERCHANTABILITY OR FITNESS FOR ANY PARTICULAR PURPOSE. Further, we will not be responsible for any consequential, incidental or indirect damages (including, but not limited to, any loss of profits) from any cause whatsoever. No person has authority to change this warranty. *Unless otherwise provided herein. Akron Brass industrial electronic components & the Severe-Duty Monitor have a one (1) year warranty. Select Akron Brass handline nozzles and valves carry a ten (10) year warranty. Scene Star Lights carry a (6) year warranty. Weldon products have a two (2) year warranty from date of manufacture (excluding consumable components). Select Weldon LED products carry a five (5) year warranty. Honda products have the manufacturers' warranty and Akron Brass disclaims any warranty in respect of those products.

© 2016 Akron Brass Company. All rights reserved. No portion of this can be reproduced without the express written consent of the Akron Brass Company.

Parts List Sheet:

126749

D48500

AKRON BRASS COMPANY

# TECHNICAL SERVICE PARTS

STYLE 5148

PRODUCT OSCILLATING MERCURY 500

IF AN ITEM IS NOTED AS "NOT FIELD REPAIRABLE", OR YOU WISH TO RETURN AN ITEM TO AKRON BRASS FOR SERVICE PLEASE GO ONLINE TO, **ONLINEREPAIR.AKRONBRASS.COM**

| Chg. | Date |
|---|---|
| 04 | 08-22 |
| 05 | 03-26 |

*FOR 5148 NOZZLES PRODUCED PRIOR TO OCTOBER 2017*

| FIND | | DESCRIPTION | ITEM | QTY |
|---|---|---|---|---|
| 1 | | BODY NOZZLE | 126981 | 1 |
| 2 | B | O-RING 2-233 | 757249 | 1 |
| 3 | B | O-RING 2-337 | 757278 | 1 |
| 4 | | SLEEVE PATTERN | 118963 | 1 |
| 5 | | NUT CAM | 735037 | 1 |
| 6 | | SCREW SOCKET HEAD CAP 3/8-16 x 1-1/4" | 763043 | 1 |
| 7 | | SHAPER STREAM | 770537 | 1 |
| 8 | | HEAD BAFFLE | 126982 | 1 |
| 10 | | BAND ID | 803333 | 1 |
| 11 | * | SHIM .010 PLASTIC BROWN | - | 1 |
| 12 | * | SHIM .005 PLASTIC BLUE | - | 1 |
| 13 | * | SHIM .015 PLASTIC PINK | - | 1 |
| 14 | B | O-RING 2-232 | 757045 | 1 |
| 15 | A,C | BEARING BALL STAINLESS STEEL 1/4" | - | 75 |
| 16 | | SCREW CUP POINT SET 3/8-16 x 1/2" | 765187 | 1 |
| 17 | ** | WATER WHEEL ASSEMBLY | - | - |
| 18 | A,B | GASKET | 717043 | 1 |
| 19 | A | PLUG SWIVEL | 742023 | 1 |
| 20 | A | SWIVEL 2-1/2" NH | 127318 | 1 |

| FIND | | DESCRIPTION | ITEM | QTY |
|---|---|---|---|---|
| 55 | | BOLT SHOULDER | 803303 | 1 |
| 59 | | END ROD | 710163 | 2 |
| 60 | | SHAFT ROCKER | 768432 | 1 |
| 61 | | NUT JAM 5/16-24 | 735098 | 1 |
| 62 | | PIN T-HANDLE | 741077 | 1 |
| 66 | | BRACKET | 126750 | 1 |
| 67 | | TRUNNION | 773571 | 2 |
| 70 | | SPACER NYLON | 768490 | 1 |
| 72 | | BUSHING LINK PIN | 803323 | 2 |
| 73 | | SCREW SOCKET HEAD CUP POINT SET #8-32 x 3/16" | 765042 | 1 |
| 77 | | TRUNION LOWER | 773572 | 1 |
| 78 | | TRUNNION SHAFT | 770469 | 1 |
| 79 | | KNOB LOCK | 127390 | 1 |
| 80 | | TRUNNION SIDE | 773573 | 1 |
| 81 | | SCREW SOCKET HEAD CUP POINT SET 1/4-20 x 3/16" | 765008 | 1 |
| 82 | | SPACER | 769225 | 1 |
| 83 | | RING RETAINING | 118964 | 1 |
| 84 | | TEETH TURBINE | 772171 | 1 |
| 85 | B | O-RING 2-155 | 757359 | 1 |
| 86 | | SCREW SOCKET HEAD CAP #6-32 x 1/2" | 765150 | 2 |
| 87 | *** | O-RING 3.5mm X 80mm X 87mm | 757555 | 1 |
| 88 | | BELLEVILLE DISC SPRING 3/16" | 784276 | 2 |
| 89 | | WEDGE LOCK WASHER #6 (2 PC) | 784277 | 1 |

| | | |
|---|---|---|
| A | SWIVEL ASSEMBLY 2-1/2" NH | 127391 |
| B | FIELD SERVICE KIT | 91010001 |
| C | KIT OF 50 BALLS 1/4" STAINLESS STEEL | 123074 |

* INSTALLED AT FACTORY FOR FINAL FLOW CALIBRATION.
** WATER WHEEL ASSEMBLY IS NOT FIELD REPAIRABLE RETURN TO AKRON BRASS FOR SERVICE.
*** SEE WORK INSTRUCTIONS 126646 FOR INSTALLATION.

PHONE: 800.228.1161 | www.akronbrass.com

WARRANTY AND DISCLAIMER*: We warrant Akron Brass products for a period of five (5) years* after purchase against defects in materials or workmanship. Akron Brass will repair or replace product which fails to satisfy this warranty. Repair or replacement shall be at the discretion of Akron Brass. Products must be promptly returned to Akron Brass for warranty service. We will not be responsible for: wear and tear; any improper installation, use, maintenance or storage; negligence of the owner or user; repair or modification after delivery; failure to follow our instructions or recommendations; or anything else beyond our control. WE MAKE NO WARRANTIES, EXPRESS OR IMPLIED, OTHER THAN THOSE INCLUDED IN THIS WARRANTY STATEMENT, AND WE DISCLAIM ANY IMPLIED WARRANTY OF MERCHANTABILITY OR FITNESS FOR ANY PARTICULAR PURPOSE. Further, we will not be responsible for any consequential, incidental or indirect damages (including, but not limited to, any loss of profits) from any cause whatsoever. No person has authority to change this warranty. *Unless otherwise provided herein. Akron Brass industrial electronic components & the Severe-Duty Monitor have a one (1) year warranty. Select Akron Brass handline nozzles and valves carry a ten (10) year warranty. Scene Star Lights carry a (6) year warranty. Weldon products have a two (2) year warranty from date of manufacture (excluding consumable components). Select Weldon LED products carry a five (5) year warranty. Honda products have the manufacturers' warranty and Akron Brass disclaims any warranty in respect of those products.
© 2016 Akron Brass Company. All rights reserved. No portion of this can be reproduced without the express written consent of the Akron Brass Company.

Parts List Sheet:

126749

D48500