OPTIONAL DISCHARGE FLANGES			
	STANDARD	OPTIONAL	STANDARD HOLE
A	——	2-1/2, 3 & 4 NPT	CAST SOLID
B	BLANK	1-1/4, 2, 2-1/2 & 3 NPT	3
C	BLANK	1-1/4, 2, 2-1/2 & 3 NPT	3
D	——	1-1/4, 2, 2-1/2 & 3 NPT	CAST SOLID
E	——	1-1/4, 2, 2-1/2 & 3 NPT	CAST SOLID
F	——	1-1/4, 2, 2-1/2 & 3 NPT	CAST SOLID
G	——	1-1/4, 2, 2-1/2 & 3 NPT	CAST SOLID
H	BLANK	2-1/2, 3 & 4 NPT	4
K	BLANK	1-1/4, 2, 2-1/2 & 3 NPT	3
L	BLANK	1-1/4, 2, 2-1/2 & 3 NPT	3
M	BLANK	1-1/4, 2, 2-1/2 & 3 NPT	3
N	BLANK	1-1/4, 2, 2-1/2 & 3 NPT	3
O	——	1-1/4, 2, 2-1/2, 3 NPT	3
P	——	1-1/4, 2, 2-1/2, 3 NPT	3
Q	——	1-1/4, 2, 2-1/2 & 3 NPT	3
R	——	1-1/4, 2, 2-1/2 & 3 NPT	3
S	——	TANK SUCTION	3
UT U	BLANK	1-1/4, 2, 2-1/2 & 3 NPT	3
VT V	BLANK	1-1/4, 2, 2-1/2 & 3 NPT	3
WT W	BLANK	1-1/4, 2, 2-1/2 & 3 NPT	3
XT X	BLANK	1-1/4, 2, 2-1/2 & 3 NPT	3
O*	BLANK	2-1/2 ,3 AND 4 NPT	4
P*	BLANK	2-1/2 ,3 AND 4 NPT	4

NOTES:
1. REFER TO HALE PUMP/ENGINE COMBINATION LIST TO SELECT PROPER RATIO TO MATCH PUMP WITH ENGINE.
2. WEIGHT OF STANDARD QFLO PLUS 1250 G.P.M. PUMP AS SHOWN LESS PRIMING PUMP = 1100 LBS.

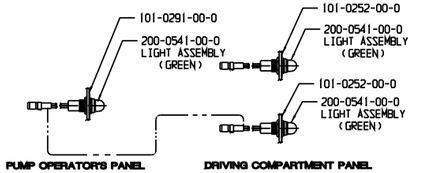

PUMP SHIFT INDICATOR LIGHTS

FOR WIRING SCHEMATIC SEE PLATE NO. 746

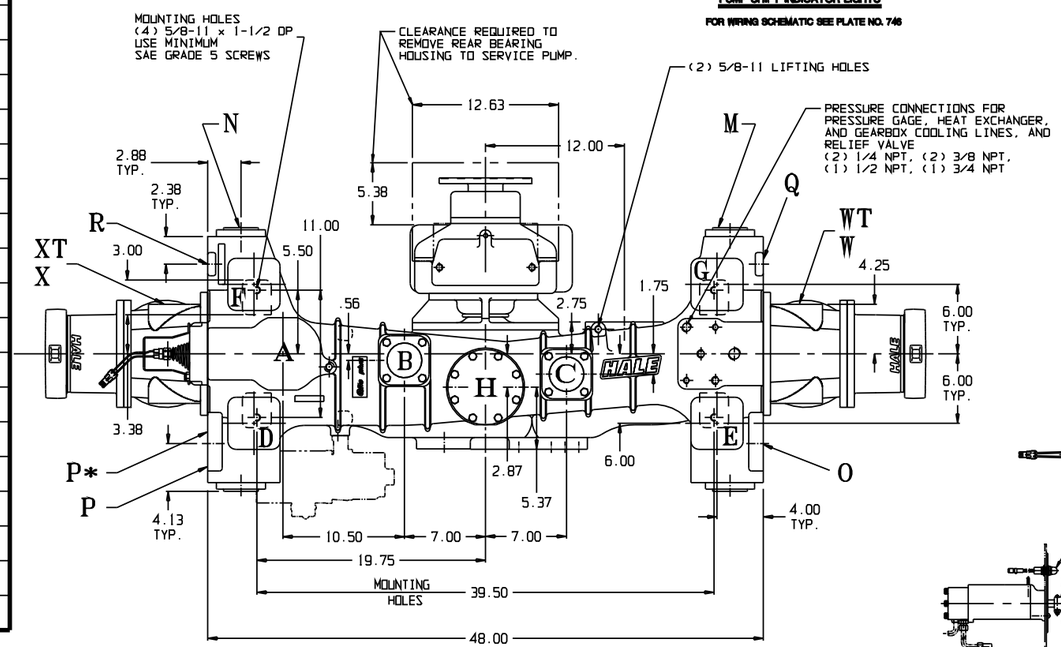

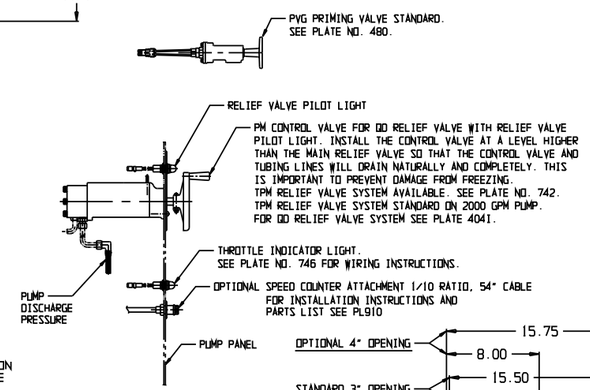

PUMP MODEL	GEAR RATIO	GEARBOX TYPE	DIMENSIONS W	XX	Y	Z
Qflo Plus *-28	2.83	EXTRA LONG (X) GEARBOX	14.56	5.44	4.06	1.84
Qflo Plus *-25	2.55		14.75			
Qflo Plus *-23	2.32		14.90			
Qflo Plus *-21	2.13		15.06			
Qflo Plus *-19	1.96		15.25			
Qflo Plus *-23	2.28	** LONG (L) GEARBOX	12.38	4.31	5.18	2.00
Qflo Plus *-21	2.05		12.56			
Qflo Plus *-19	1.86		12.75			
Qflo Plus *-17	1.71		12.94			
Qflo Plus *-15	1.58		13.13			

* RATED CAPACITY (GPM) 750, 1000 AND 1250

** THE LONG (L) GEARBOX IS STANDARD AND WILL BE SUPPLIED UNLESS OTHERWISE SPECIFIED.

EXAMPLE: THE MODEL NUMBER FOR A 1000 GPM RATED PUMP WITH A 2.28 GEAR RATIO AND A LONG GEARBOX WOULD BE QFLO PLUS100-23L.

WARNING

EXCEEDING THESE LIMITS OR FAILURE TO FOLLOW THE RECOMMENDATIONS OUTLINED ON THIS DRAWING COULD DAMAGE THE GEARBOX AND RESULT IN PERSONAL INJURY.
QFLO MIDSHIP MAXIMUM PUMP PRESSURE (HYDROSTATIC & HYDRODYNAMIC) = 600 PSI
2HP HIGH PRESSURE PUMP MAXIMUM PUMP PRESSURE (HYDROSTATIC & HYDRODYNAMIC) = 1000 PSI
MAXIMUN POWER INPUT FOR PUMPING = 450 HP.
MAXIMUM TORQUE ON PUMP SHAFT = 2300 LBS-FT
MAXIMUM GEARBOX SHAFT TORQUE (ROAD) = 16,000 LBS-FT

PUMP MODEL	QFLO PLUS *-23L	QFLO PLUS *-21L	QFLO PLUS *-19L	QFLO PLUS *-17L	QFLO PLUS *-15L
MAX GEARBOX INPUT RPM	2630	2920	3220	3500	3800
PUMP MODEL	QFLO PLUS *-28X	QFLO PLUS *-25X	QFLO PLUS *-23X	QFLO PLUS *-21X	QFLO PLUS *-19X
MAX GEARBOX INPUT RPM	2120	2350	2580	2800	3060

SEE HALE TORQUE LIMIT CHART F-72 FOR ADDITIONAL DATA.

THIS PRODUCT AND ITS COMPONENTS ARE PROTECTED BY ONE OR MORE OF THE FOLLOWING U.S. PATENTS AND OTHER PATENTS PENDING:

950,756	3,500,961	3,859,703	4,209,282	4,587,862
3,116,694	3,726,308	3,918,681	4,311,440	4,653,978
3,159,559	3,801,224	4,089,345	4,337,830	

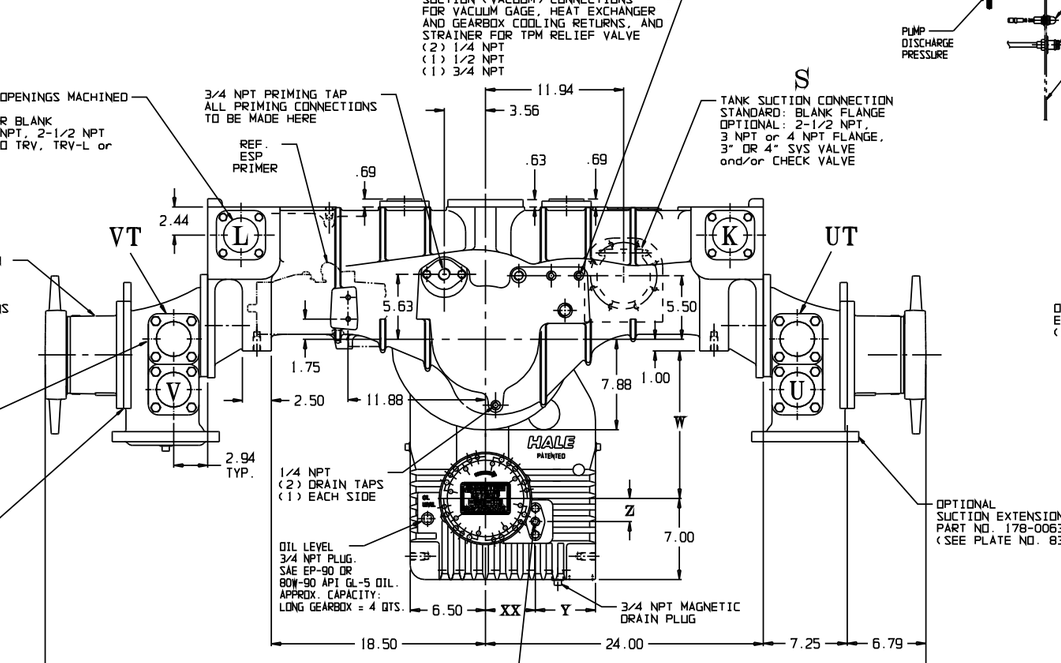

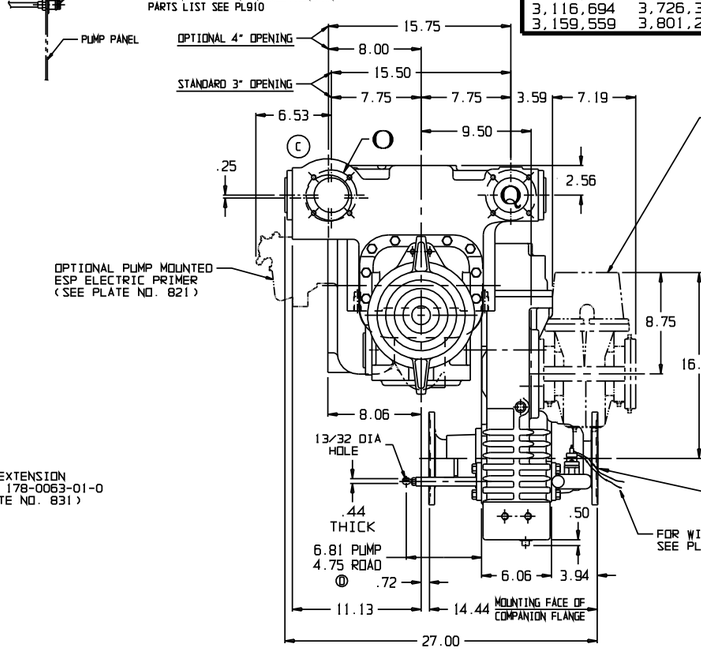

ECO NO	REV	CHANGED FROM	BY	DATE	APVD
1040	D	DIMENSION CHANGE	DRS	12-7-10	DRS
0548	C	REVISED W BOLT PATTERN ADDED OPTIO PLUG LOGO	MJP	03-30-07	MAL
0167	B	WAS CAST SOLID	ERB	08-05-05	MAL
04-256	A	RELEASED FOR PRODUCTION	FAS	10-11-04	MAL

HALE PRODUCTS, INC.
A Unit of IDEX Corporation
Conshohocken, PA 19428 USA

COPYRIGHT © NOT TO BE REPRODUCED OR USED TO MAKE OTHER DRAWINGS OR MACHINERY

DRAWN FAS | CHECKED MAL | DATE 10-11-04 | SIZE F | SCALE: .25

PLATE NO. 1052AD