HALE TYPE "K" SERIES GEARBOX

PROJECTION:

ITEM NO.	PART NO.	DESCRIPTION	QTY.
1	GEARBOX	SEE GEARBOX TABLE	1
2	077-9133-01-0	RING, RETAINING	1
3	SHIM	SEE 048-1550-XX-0 SHIM TABLE	1
4	159-1710-10-0	SPACER, SHAFT, IDLER	1
5	250-8310-00-0	LK IDLER GEAR BEARING	2
6	037-2290-00-0	SHAFT, INTERMEDIATE	1
7	097-0100-00-0	WASHER	1
8	018-2020-25-0	SCREW, HHCS, 1/2-13 X 2, GRADE 8	1
9	040-2280-00-0	SHAFT SEAL RING	1
10	046-6800-00-0	GASKET, LK REAR BRG HSG	1
11	044-0260-00-0	VENT, AIR 1/8 MPT	1
12	044-1820-00-0	BEARING COVER	1
13	018-1814-25-0	SCRW,7/16-14x1.5,GR8,ZINC PL	20
14	SHIM	SEE 048-1470-XX-0 SHIM TABLE	1
15	040-1610-00-0	SEAL RING	1
16	008-0840-00-0	BEARING CARRIER	1
17	097-2050-00-0	WASHER (SEE NOTE 6)	2
18	018-2616-25-0	3/4-10 x 1-3/4 BOLT GR8	2
19	037-2280-00-0	OUTPUT SHAFT	1
20	250-8140-53-0	4DK TAILSHAFT BEARING ASSEMBLY	1
21	077-2810-00-0	RETAINING RING	1
22	250-8300-00-0	NU207ECJ BEARING	1
23	028-0420-00-0	SHIFT FORK	1
24	048-1430-00-0	SHIFT COLLAR	1
25	031-1720-00-0	K DRIVE GEAR (53T LH)	1
26	031-1740-00-0 031-1750-00-0	LK IDLER GEAR (43T RH) XK IDLER GEAR (57T RH)	1
27	250-8110-00-0	NEEDLE BEARING	1
28	250-8120-00-0	NEEDLE BEARING	1
29	296-2680-00-0	OIL SEAL	2
30	037-2270-00-0	INPUT SHAFT	1
31	YOKE	SEE YOKE TABLE	2
32	250-8140-52-0	4DK INPUT BEARING ASSEMBLY	1
33	217-0101-00-0	PLUG - 1/8 NPT M.I. SQ	1
34	018-1810-08-0	SCREW 7/16-14 X 1.00 SOC HD CAP	4
35	250-9550-00-0	GEARBOX BEARING	2
36	018-8350-00-0	4DK SHIFTING FORK SCREW	1
37	046-5060-00-0	GASKET QL-W429	2
38	018-2104-61-0	SCREW-1/2-20 X 1/2 PLATED SET	1
39	042-0060-00-0	SHAFT LOCK SPRING	1
40	039-0050-00-0	GEARSHIFT SHAFT LOCK BALL	1
41	008-0990-00-0	CAP, DUST, K	1
42	200-2450-00-0	SWITCH GEARSHIFT	2
43	082-0422-03-0	1/2 MALE NPT x 3/8 TUBE COMP	4
44	007-3610-00-0	LK COOLING TUBE (SEE NOTE 3)	2
45	018-1422-25-0	5/16-18 X 2 1/4	2
46	604-0033-00-0	TUBE, COPPER	1
47	082-0318-02-0	ELBOW, 3/8 COMP X 3/8 COMP, 90 DEG	2
48	217-0501-00-0	PLUG-3/4 NPT M.I.	1
49	040-8210-00-0	SEAL RING	2
50	217-0301-08-0	3/8 NPT MAGNETIC DRAIN PLUG	1
51	217-0401-00-0	PLUG-1/2" NPT BLACK IRON	1

GEARBOX MODEL	GEAR RATIO	GEARBOX PART NO.	A	B	C	D	E	F
LK	2.30	504-0670-00-0	503.9 [19.84]	337.3 [13.28]	6.4 [0.25]	-	158.0 [6.22]	373.9 [14.72]
	2.04			345.2 [13.59]	-	-		
	1.89			350.0 [13.78]	-	2.8 [0.11]		
	1.71			354.8 [13.97]	-	10.9 [0.43]		
	1.60			359.4 [14.15]	-	6.4 [0.25]		
XK	2.30	504-0680-00-0	562.4 [22.14]	395.7 [15.58]	6.4 [0.25]	-	186.9 [7.36]	432.1 [17.01]
	2.04			403.6 [15.89]	-	-		
	1.89			408.4 [16.08]	-	2.8 [0.11]		
	1.71			413.3 [16.27]	-	10.9 [0.43]		
	1.60			418.1 [16.45]	-	6.4 [0.25]		

YOKE DIMENSIONS	
G	YOKES
538.5 [21.2]	115-1450-03-0 17T HALF ROUND
	115-1450-04-0 17N FULL ROUND
555.5 [21.9]	115-1450-01-0 18T HALF ROUND
	115-1450-06-0 18N FULL ROUND
550.7 [21.7]	115-1450-02-0 176T HALF ROUND
	115-1450-05-0 176N FULL ROUND
525.3 [20.7]	115-1450-00-0 RPL25 HALF ROUND

⚠ WARNING ⚠

EXCEEDING THESE LIMITS OR FAILURE TO FOLLOW THE RECOMMENDATIONS OUTLINED ON THIS DRAWING COULD DAMGE THE GEARBOX AND RESULT IN PERSONAL INJURY.

MAXIMUM GEARBOX SHAFT TORQUE = 18,500 LB-FT (20,083 N-m).
SEE HALE TORQUE LIMIT CHART F-72 FOR ADDITIONAL INFORMATION.

DRIVE LINE RECOMMENDATIONS

APPARATUS BUILDER SUPPLIED DRIVELINES SHALL BE OF APPROPRIATE SIZE TO MATCH THE CHASSIS AND PUMP REQUIREMENTS WITH INDIVIDUAL JOINT CANCELLATION AND PHASING BEFORE AND AFTER THE PUMP. DRIVE SHAFT BALANCE (INCLUDING YOKES) SHALL NOT EXCEED THE RECOMMENDED LIMIT OF EITHER THE DRIVE SHAFT OR CHASSIS TRANSMISSION MANUFACTURER'S SPECIFICATIONS. DRIVE SHAFT FULL RANGE OPERATING SPEEDS SHALL NOT EXCEED 42% OF ITS CRITICAL SPEED.

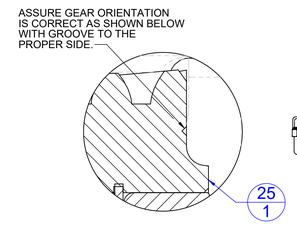

DETAIL D
SCALE 1 : 1

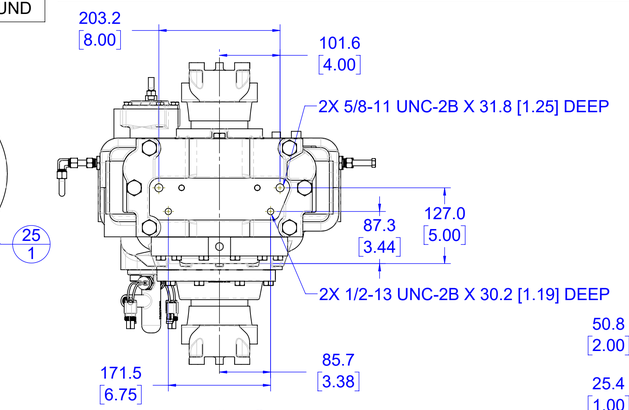

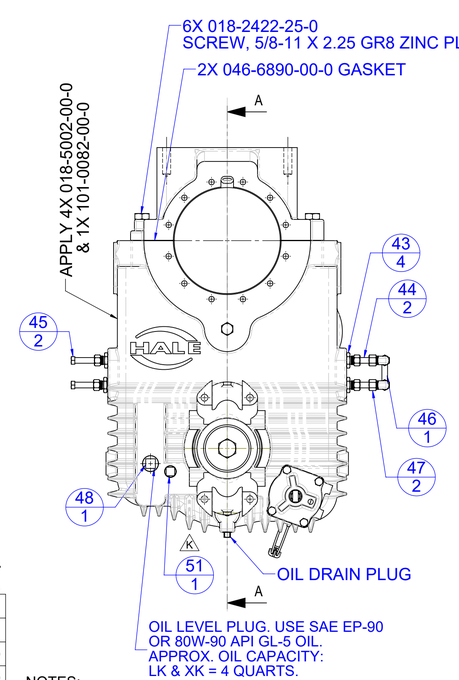

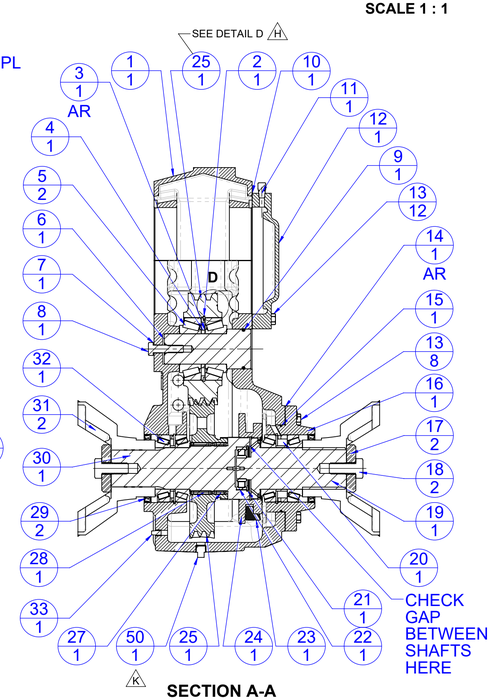

SECTION A-A

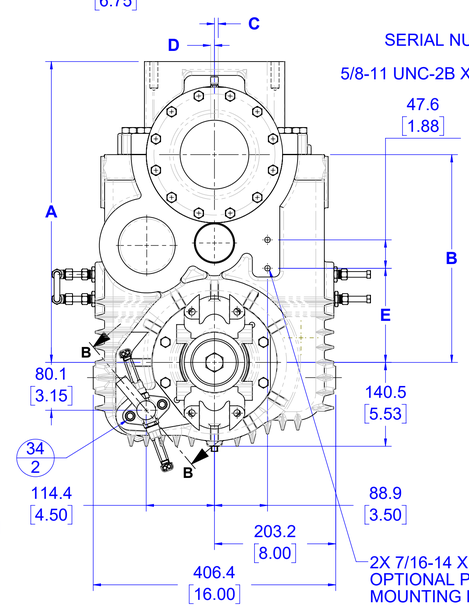

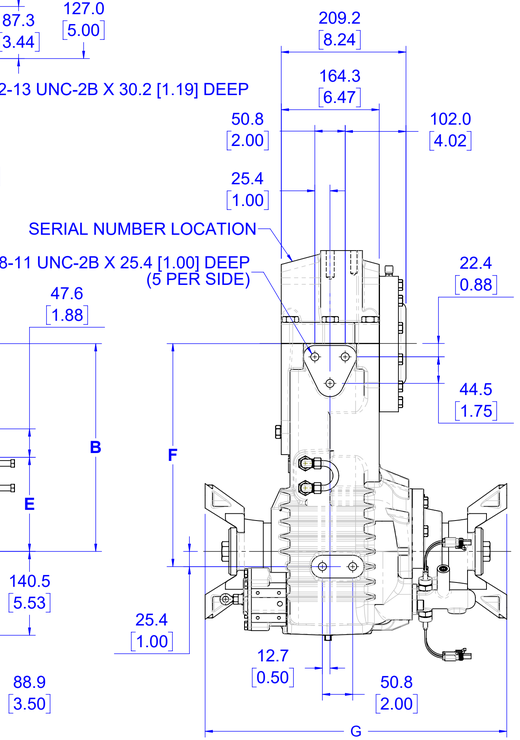

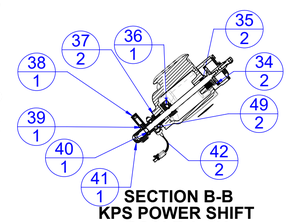

SECTION B-B
KPS POWER SHIFT
SCALE 1 : 10

048-1470-XX-0 BEARING CARRIER SHIM TABLE (SEE NOTE 4)			
ITEM NO.	PART NO.	DESCRIPTION	QTY.
14	048-1470-05-0	SHIM, BRG CARRIER, .005 THICK	AS REQUIRED
14	048-1470-07-0	SHIM, BRG CARRIER, .007 THICK	AS REQUIRED
14	048-1470-20-0	SHIM, BRG CARRIER, .020 THICK	AS REQUIRED

048-1550-XX-0 IDLER GEAR BEARING SHIM TABLE (SEE NOTE 5)			
ITEM NO.	PART NO.	DESCRIPTION	QTY.
3	048-1550-03-0	SHIM, BEARING, .003 THICK	AS REQUIRED
3	048-1550-05-0	SHIM, BEARING, .005 THICK	AS REQUIRED
3	048-1550-07-0	SHIM, BEARING, .007 THICK	AS REQUIRED

NOTES:
1. APPLY LOCTITE #246 HIGH TEMPERATURE THREAD LOCKER OR EQUIVALENT TO SCREW THREADS AND TORQUE SCREWS PER HALE ENGINEERING STANDARD ES018-002.
2. UNLESS OTHERWISE INDICATED, ALL FASTENERS TO BE GRADE 5 ZINC PLATED STEEL.
3. XK GEARBOX REQUIRES (1) ADDITIONAL 007-3610-10-0 COOLING TUBE, (2) ADDITIONAL 082-0422-03-0, (2) ADDITIONAL 082-0318-02-0 AND (1) ADDITIONAL 604-0033-00-0.
4. INSTALL 048-1470-XX-0 SERIES SHIMS AS REQUIRED TO PRODUCE A 0.060 +/- 0.010 INCH GAP BETWEEN 037-2270-00-0 INPUT SHAFT AND 037-2280-00-0 OUTPUT SHAFT. REFER TO 029-0020-63-0 MAINTENANCE MANUAL SECTION 9.3 FOR DETAILS.
5. INSTALL 048-1550-XX-0 SERIES SHIMS AS REQUIRED UNTIL INTERMEDIATE GEAR CAN BE FREELY SPUN BY HAND AFTER 018-2020-25-0 INTERMEDIATE SHAFT SCREW HAS BEEN FULLY TORQUED.
6. APPLY THIN COATING OF LOCTITE #290 OR EQUIVALENT TO INSIDE FACE OF WASHER PRIOR TO INSTALLATION TO PREVENT OIL LEAKS THROUGH DRIVE SHAFT SPLINES.
7. SEE PL1145 FOR KPS POWER SHIFT COMPONENTS.
8. SEE PL1177 FOR DRIVETHRU & PTO OPTIONS.

REVISIONS

ECN	REV.	ZONE	CHANGED FROM	BY	DATE	APVD
4892	H		ADDED DETAIL D & ORIENTATION NOTE	JMR	12AUG2019	MAS
5102	J		REMOVED 2.5 RATIO OPTION	DMB	07APR2020	JS2
5625	K		SEE ECN 5625 FULL FORM	KTN	02DEC2021	JSJ

UNLESS OTHERWISE SPECIFIED
DIMENSIONS ARE IN MILLIMETERS
[INCHES ARE FOR REFERENCE, ONLY]
TOLERANCE FOR MILLIMETER DIMENSIONS:
X: ±1
X.X: ±0.5
X.XX: ±0.25
X.XXX: ±0.125
ANGLES: ±0.25°
SURFACE TEXTURE IN µm Ra
REMOVE ALL SHARP EDGES, 0.25MAX

COPYRIGHT ©
NOT TO BE REPRODUCED OR USED TO MAKE OTHER DRAWINGS OR MACHINERY

FSG OF IDEX CORPORATION

MATERIAL
MADE FROM
FINISH
PROJECT

HALE GODIVA Class 1

TITLE: HALE TYPE "K" SERIES GEARBOX

DRAWN	ZML	SIZE	DRAWING NUMBER	REV
APPROVED	MAL	D	PL978	K
DATE	23AUG2007	SCALE 1:5		SHEET 1 OF 1